PARTS CATALOG

PART NUMBER: M53903

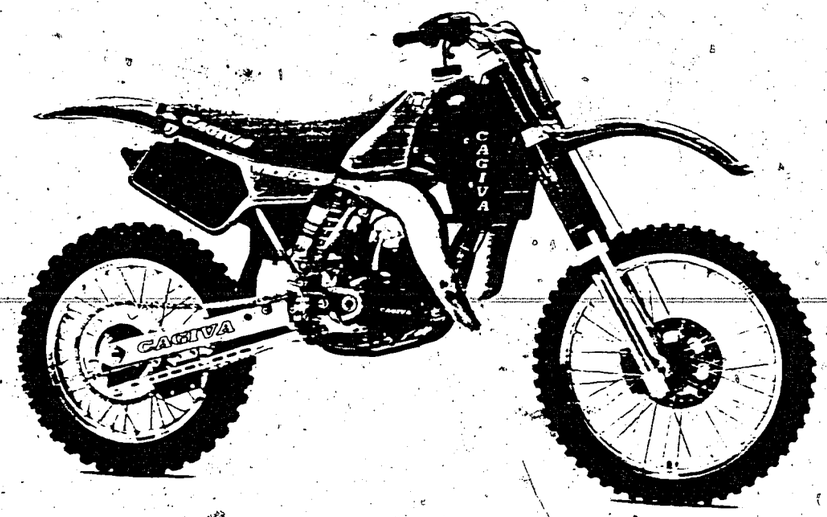

CAGIVA WMX 125/87 CROSS

FRAME NUMBER(VIN) BEGINS AT

ZCGCBXAX-HV004000-

Air Filter.....C-4
Carburetor.....C-3
Chain.....E-3,4
Clutch.....B-10
Crankcase.....B-7
Crankcase covers.....B-8
Crankshaft.....B-3,4
Cylinder.....B-3,4
Cylinder head.....B-3,4
Exhaust power valve.....B-5
Exhaust system.....D-12
Fenders.....D-10
Footrests.....D-2
Frame.....D-2
Front brake..... D-13,E-2
Front fork.....D-3,4,5
Fuel tank.....D-11
Gearshift mechanism.....B-13
Handlebar.....D-8
Ignition system.....C-2
Kickstarter.....B-9
Piston.....B-3,4
Radiators.....B-6
Rear brake.....E-3,4
Rear brake pedal.....D-9
Seat.....D-10
Shock Absorber.....D-7
Side covers.....D-10
Stand.....D-7
Swing arm.....D-7
Tools.....B-2
Transmission.....B-11,12
Wheel,front.....D-13,E-2
Wheel,rear..... E-3,4

CAGIVA

1987 CAGIVA WMX 125 CROSS TECHNICAL SPECIFICATIONS

ENGINE

TYPE	2-STROKE, SINGLE CYLINDER, WATER-COOLED
VALVE ARRANGEMENT	PISTON PORTED WITH REED VALVE INDUCTION
BORE AND STROKE	56 x 50.6
DISPLACEMENT	124.63 cc
COMPRESSION RATIO	15.6 : 1
MAX. POWER, RPM	NA
MAX. TORQUE, RPM	NA
CARBURETION	KEIHIN-FLAT SLIDE PJ-36
AIR FILTER	SPONGE ELEMENT
LUBRICATION	OIL GASOLINE 2% MIXTURE
STARTING SYSTEM	KICK
IGNITION	ELECTRONIC
GENERATOR	12 V

DRIVETRAIN

CLUTCH	OIL-WET, MULTI-PLATE
PRIMARY DRIVE	GEARS
SECONDARY DRIVE	CHAIN
GEARBOX	6-SPEED

SUSPENSION/WHEEL TRAVEL

FRONT	TELESCOPIC, WHITE POWER
REAR	SWINGING ARM WITH HYDROPNEUMATIC CENTRAL SHOCK ABSORBER (OHLINS)

BRAKES

FRONT	Ø 230 DISC
REAR	Ø 130 DRUM

TIRES

FRONT	3.00 x 21"
REAR	4.25 x 18"

DIMENSIONS AND CAPACITIES

WEIGHT	KG. 88 AT LEAST ACCORDING TO FIM REGULATIONS
WHEELBASE	1440 mm
SEAT HEIGHT	925 mm
HANDLEBAR WIDTH	830 mm
MAX LENGTH	2145 mm
GROUND CLEARANCE	355 mm

DIMENSIONS AND CAPACITIES,CONT.

STEERING HEAD ANGLE	5°
FRONT WHEEL TRAIL	117 mm
FRAME	DOUBLE DOWN CRADLE
OIL CAPACITY	0.7 lt
FUEL TANK	8 lt

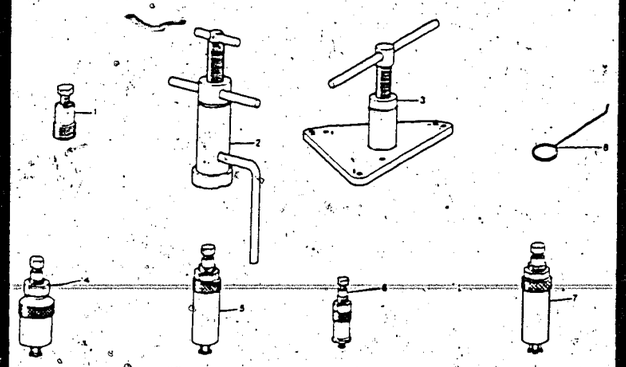

Service Tools.....B-2

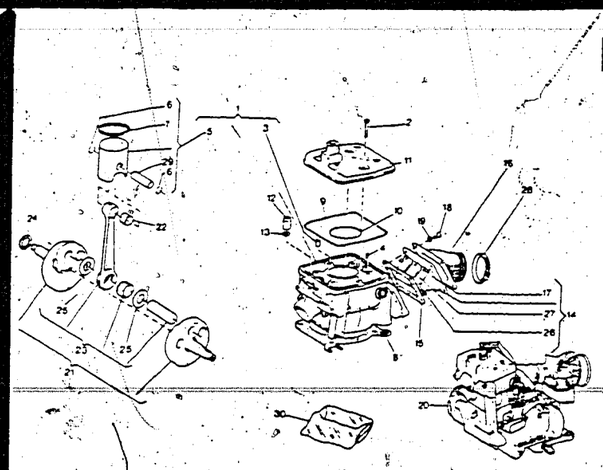

Cylinder & Head, Crankshaft & Piston(1/2).....B-3

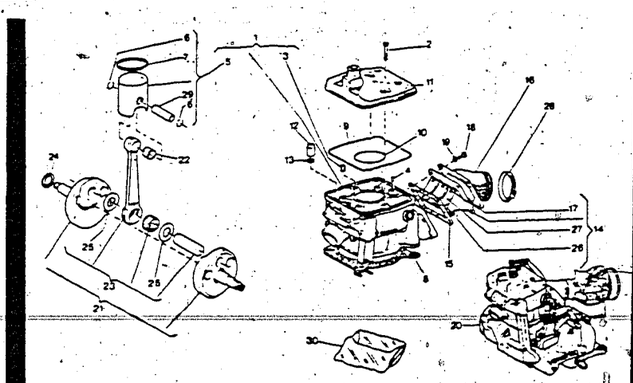

Cylinder & Head, Crankshaft & Piston(2/2).....B-4

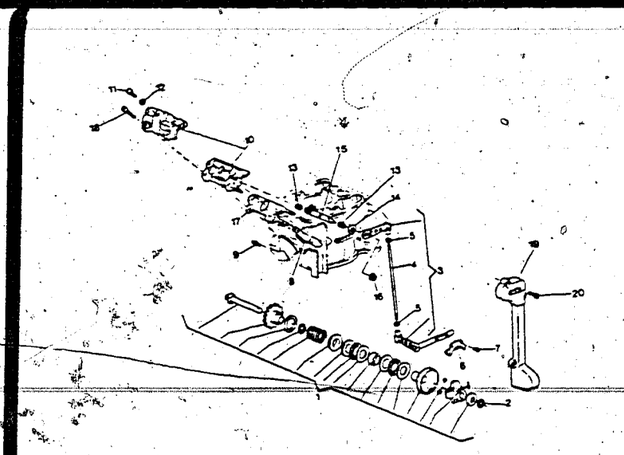

Exhaust Power Valve.....B-5

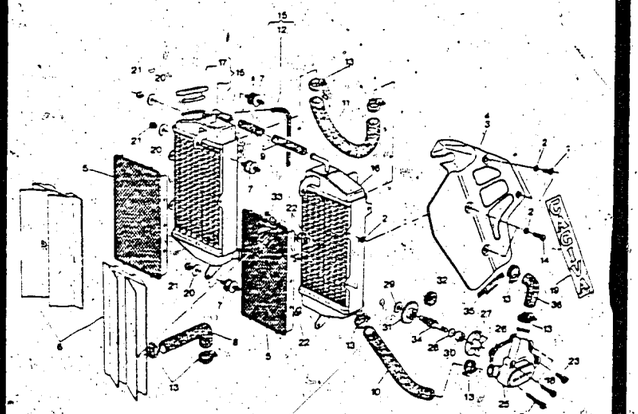

Radiators, Water Pump & Cooling B-6

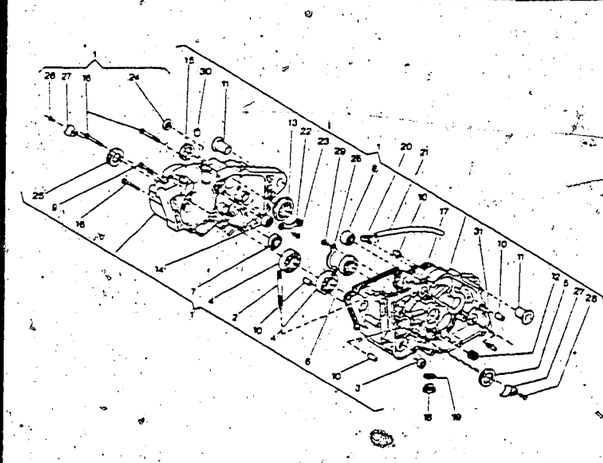

Crankcase.....B-7

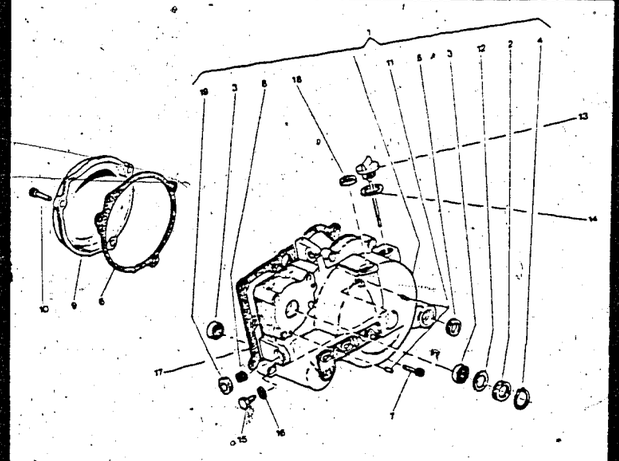

Crankcase Covers.....B-8

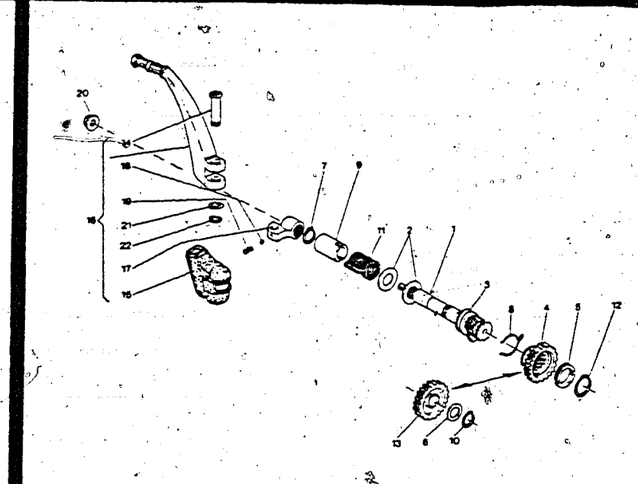

Kick starter.....B-9

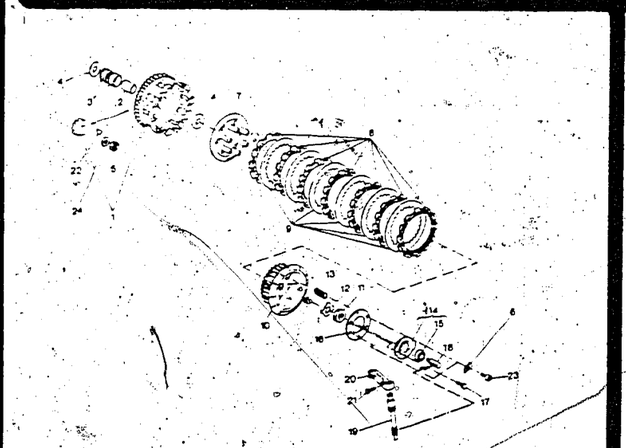

Clutch.....B-10

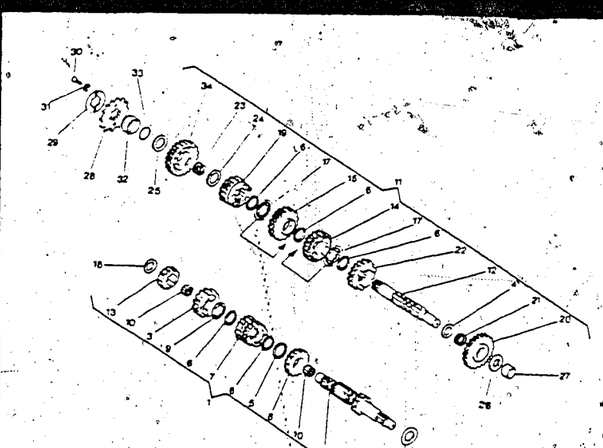

Transmission(1/2).....B-11

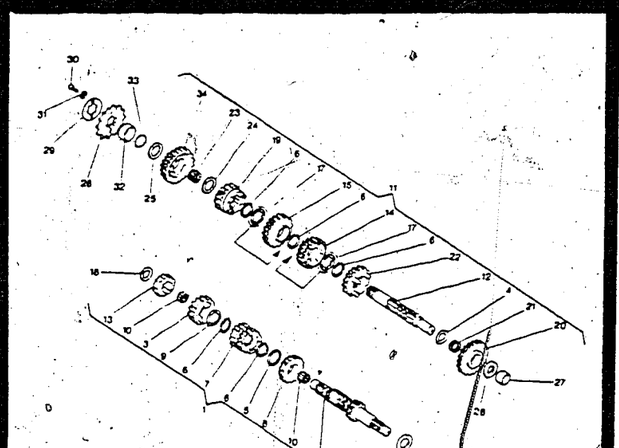

Transmission(2/2).....B-12

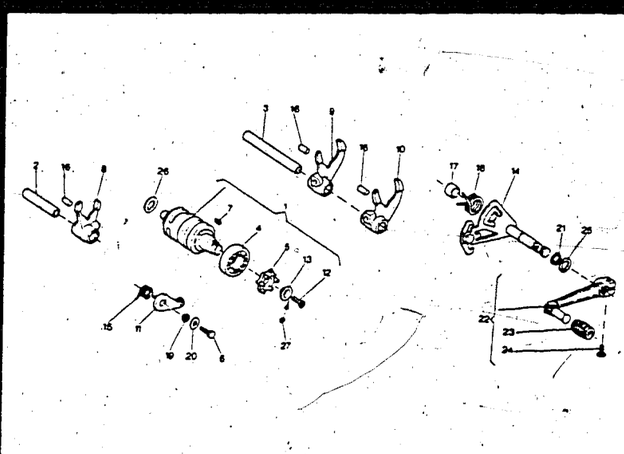

Gearshift Mechanism.....B-13

CAGIVA MOD. WMX 125/87 CROSS

1 TAVOLA - DRAWING TABLE - BILD

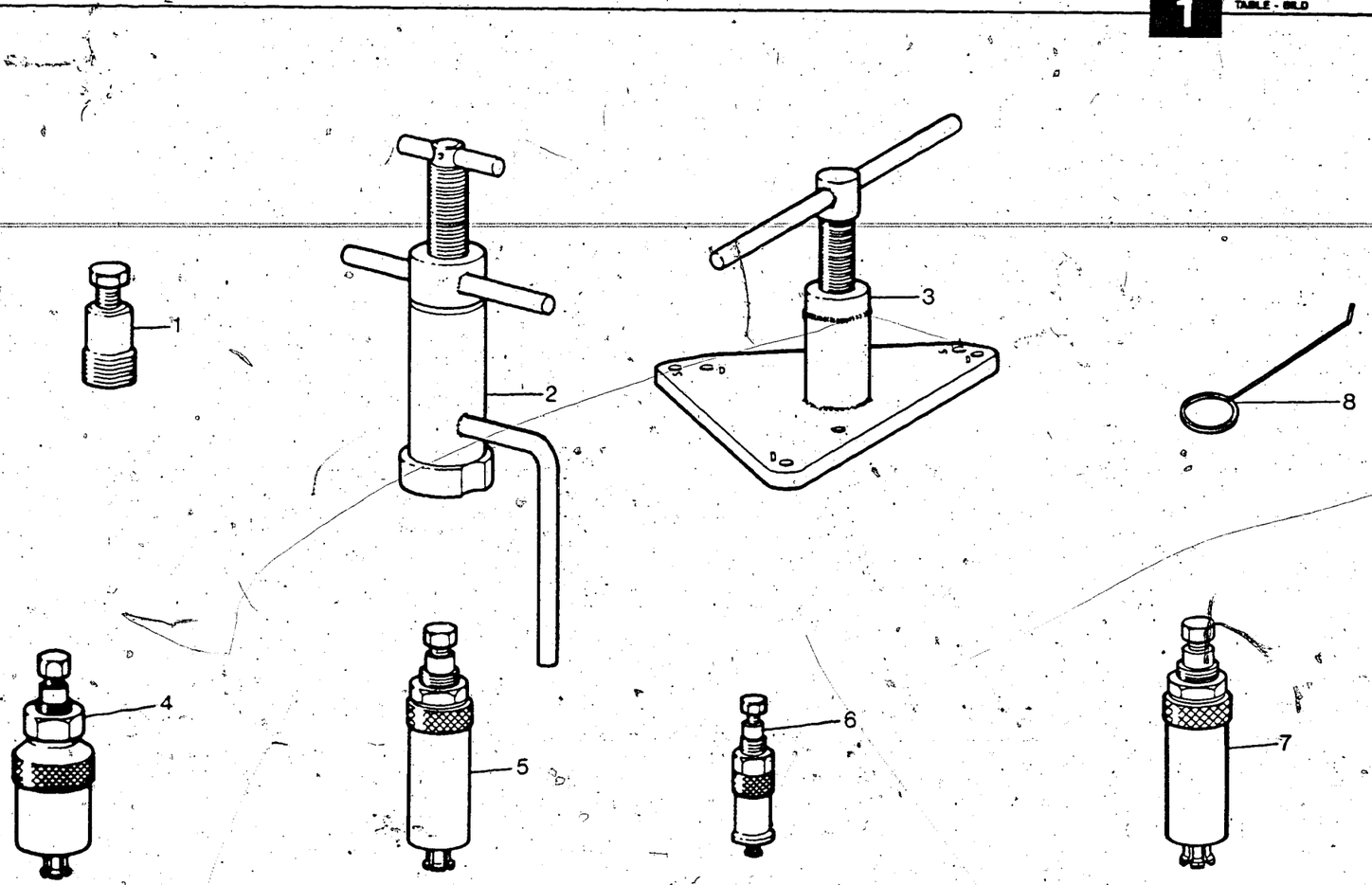

Note Notes Notes Marks	Index No. Pos. N.	Code N. Nr. Code N. Cod Code Nr.	NAME	Qty Q.tà Q.te M.ge
	1	40907	Rotor puller	1
	2	43719	Installing tool. crankshaft left	1
	3	43718	Crankcase splitting tool and crankshaft disassembly	1
	4	43720	Tool for bearing	1
	5	43823	Main shaft needle bearing puller	1
	6	43824	Extracteur for roller bearing bushing valve drive gear, bushing water pump and valve drive gear	1
	7	33055	Extractor for seal ring water pump	1
	8	46412	Control tool between relief valve and piston	1

CAGIVA MOD. WMX 125/87 CROSS

2 TAVOLA - DRAWING TABLE - BILD

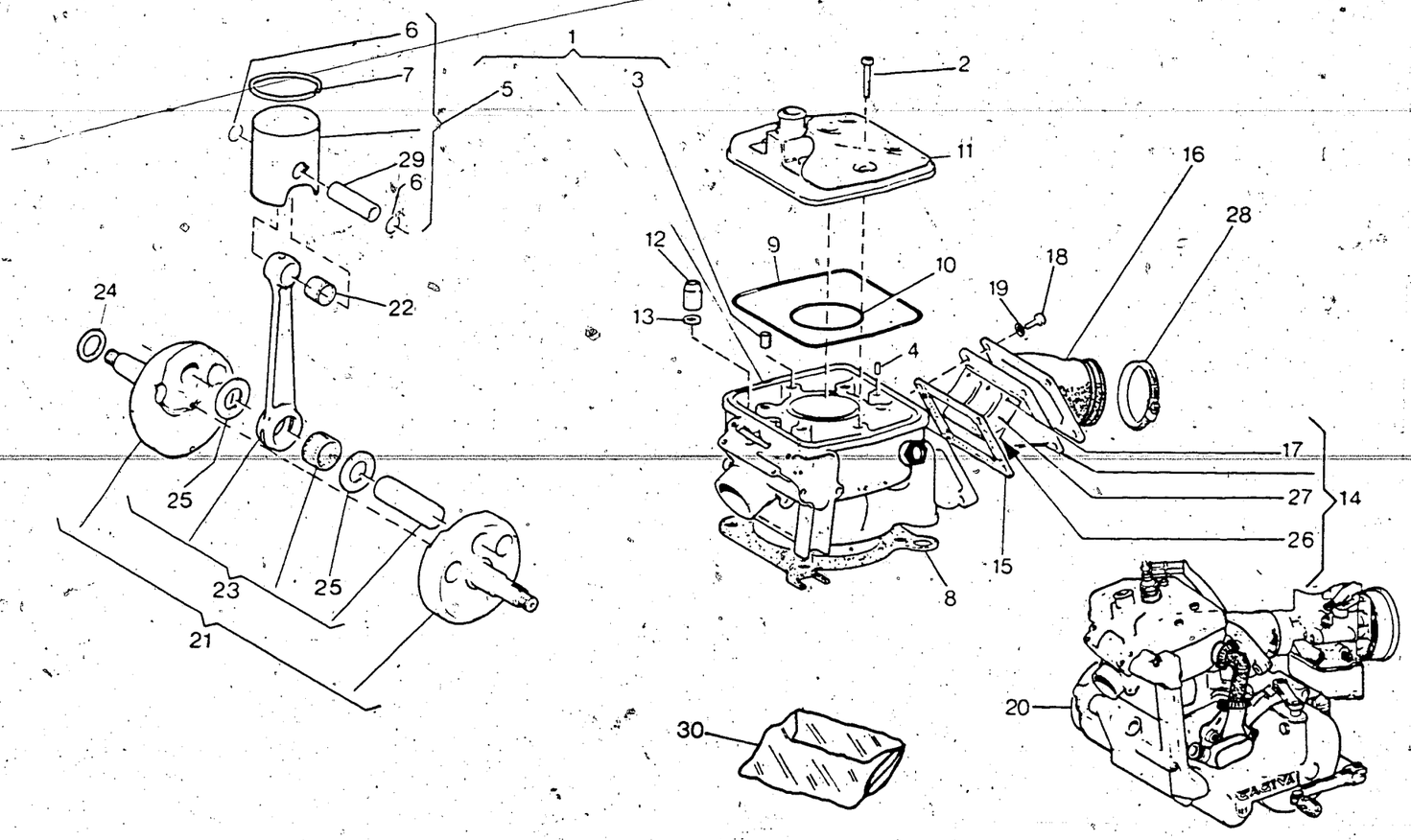

Note Notes Notes Marks	Index No. Pos. N.	Code N. Nr. Code N. Cod Code Nr.	NAME	Q.ty Q.tà Q.te M.ge
	1	53223	Cylinder assy	1
	2	N2511-G22	Stud bolt	6
	3	49792	Inserted thread	6
	4	38520	Split pin	2
	5		Piston assy	1
		53145/1	B: ϕ55,97	
		53145/2	C: ϕ55,98	
		53145/3	D: ϕ55,99	
		53145/4	E: ϕ56,00	
	6	34358	Circlip	2
	7	53227	Ring	1
	8	53023/3	Gasket base cilindro sp. 0,3 mm.	1
		53023/4	Gasket base cilindro sp. 0,4 mm.	1
		53023/5	Gasket base cilindro sp. 0,5 mm.	1
		53023/6	Gasket base cilindro sp. 0,6 mm.	1
		53023/8	Gasket base cilindro sp. 0,8 mm.	1
	9	38534	-O- Ring	1
	10	39630	-O- Ring	1
	11	39899	Cylinder head	1
	12	38535	Nut	4
	13	25397	Washer	4
	14	54025	Inlet valve assy	1
	15	43067	Gasket	1
	16	53906	Union	1
	17	35408	Screw	6
	18	N2509-G22	Screw	4
	19	N15504-G22	Washer	4

CAGIVA MOD. WMX 125/87 CROSS

2 TAVOLA - DRAWING TABLE - BILD

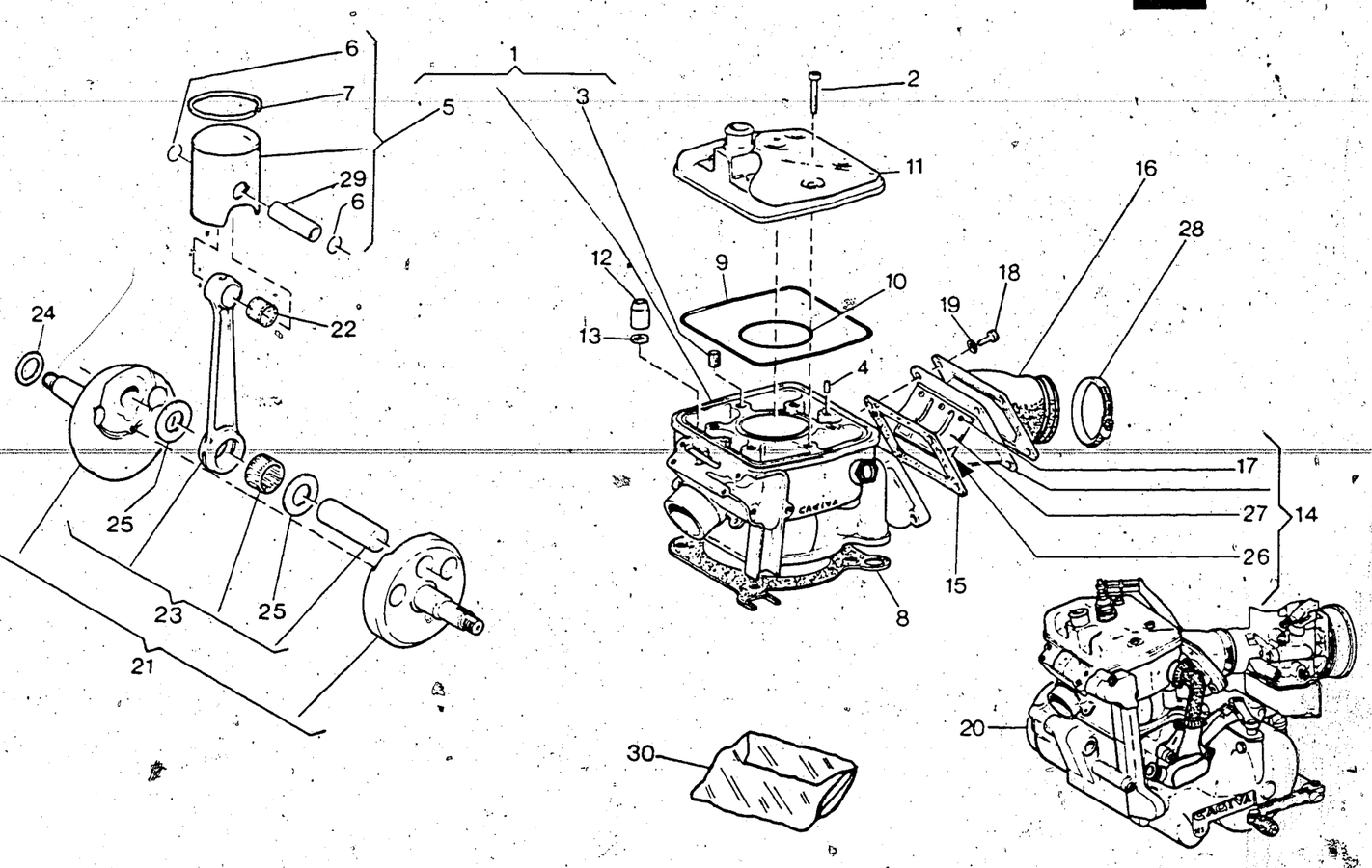

Note Notes Notes Marke	Index No. Pos. N.	Code N. Nr. Code N. Cod Code Nr.	NAME	Q.ty Q.tà Q.te M.ge
	20	54021	Engine assy with carbure.,starting lever gearbox, clutch control lever,spark plug	
				1
	21	53187	Crankshaft assy	1
•	22	21929/1	Needle bearing for small end rod (-2-4)	1
		21929/2	Needle bearing for small end rod (-1-3)	1
		21929/3	Needle bearing for small end rod (-1-3)	1
		21929/4	Neddle bearing for small end rod (0-2)	1
		21929/5	Neddle bearing for small end rod (0-2)	1
•	23	53192/1	Connecting rod compl. (WHITE)	1
		53192/2	Connecting rod compl. (WHITE)	1
		53192/3	Connecting rod compl. (BLACK)	1
		53192/4	Connecting rod compl. (BLACK)	1
		53192/5	Connecting rod compl. (RED)	1
	24		Thrust washer	1
		11794/3		
		11794/4		
		11974/5		
		11794/6		
	25	45381	Thrust washer	2
	26	55072	Plate	2
	27	55071	Plate	2
	28	27521	Clamp	1
•	29	42215/1	Pin (BLACK)	1
		42215/2	Pin (WHITE)	1
		42215/3	Pin (BLACK)	1
		42215/4	Pin (WHITE)	1
		42215/5	Pin (BLACK)	1
	30	55093	Engine seal set	1

•: Supply as per described selection. (f.i.: the bearing No. 21929/1 must be matched with the connecting rod 53192/1 and the piston pin No. 42215/1; the same is valid for the other selections).

CAGIVA MOD. WMX 125/87 CROSS

3 TAVOLA - DRAWING TABLE - BILD

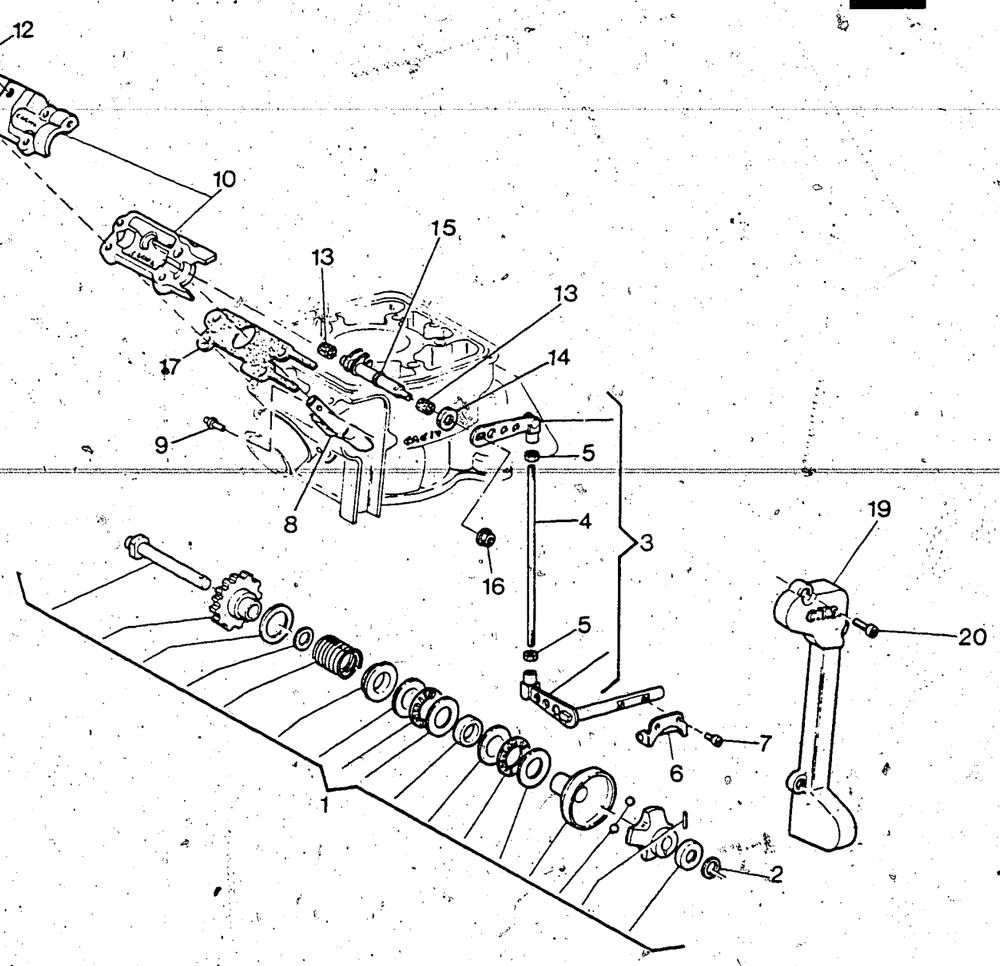

Note Notes Notes Marks	Index No. Pos. N.	Code N. Nr. Code N. Cod Code Nr.	NAME	Q.ty Q.tà Q.te M.ge
	1	38397	Valve drive regulator	1
	2		Thrust washer	1
		34292/3	Sp. 0,3 mm.	
		34292/4	Sp. 0,4 mm.	
		34292/5	Sp. 0,5 mm.	
		34292/6	Sp. 0,6 mm.	
	3	48957	Lever assy	1
	4	48956	Rod	1
	5	N15031-G22	Nut	2
	6	35620	Toggle valve drive	1
	7	N2870-G22	Screw	2
	8	42240	Exhaust valve	1
	9	36334	Pin	1
	10	38265	Bearing valve operating lever compl. cover	1 1
	11	N1049-G22	Screw	1
	12	N1532-G22	Nut	1
	13	31748	Needle bearing	2
	14	38519	Seal ring	1
	15	48954	Pin	1
	16	42278	Nut	1
	17		Gasket	1
		38419/3	Sp. 0,3 mm.	
		38419/4	Sp. 0,4 mm.	
		38419/5	Sp. 0,5 mm.	
		38419/6	Sp. 0,6 mm.	
		38419/7	sp. 0,7 mm	
		38419/8	Sp. 0,8 mm.	
	18	N2489-G22	Screw	4
	19	48955	Cover	1
	20	N7330-G22	Screw	3

CAGIVA MOD. WMX 125/87 CROSS

4 TAVOLA - DRAWING TABLE - BILD

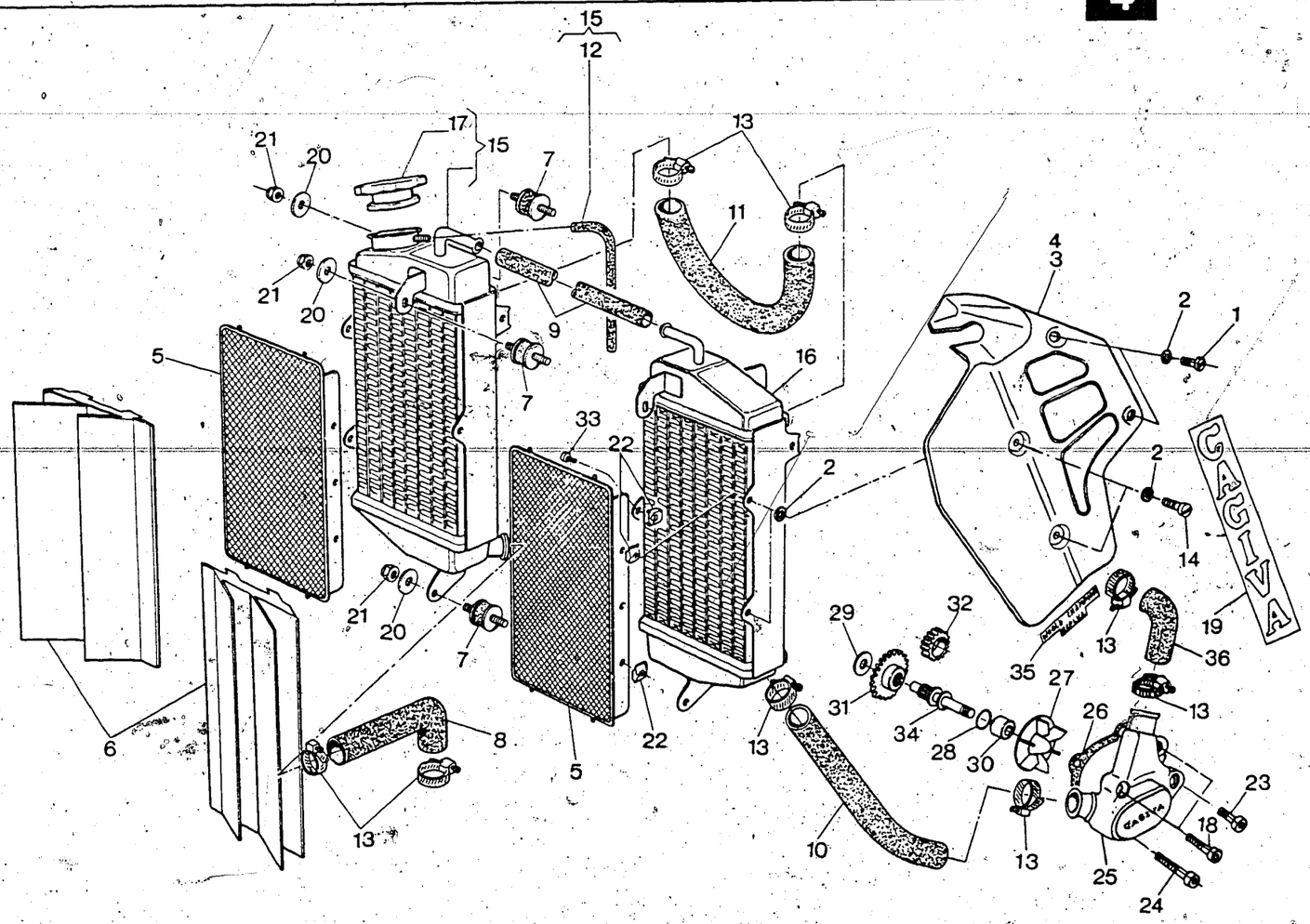

Note Notes Notes Marks	Index No. Pos. N.	Code N. Nr. Code N. Cod Code Nr.	NAME	Q.ty Q.tà Q.te M.ge
	1	37636	Screw	4
	2	37656	Washer	12
	3	52689	Right guard	1
	4	52688	Left guard	1
	5	43637	Front guard	2
	6	43639	Guard	2
	7	43717	Silent block	6
	8	43122	Line	1
	9	43716	Line	1
	10	43124	Line	1
	11	43123	Line	1
	12	43715	Breather pipe	1
	13	22613	Clamp	8
	14	43640	Screw	4
	15	43980	Right radiator assy	1
	16	43981	Left radiator	1
	17	43714	Plug	1
	18	N2515-G22	Screw	1
	19	43634	«CAGIVA» trim	2
	20	N15549-G22	Flat washer	6
	21	N15193-G22	Nut	6
	22	43638	Nut	6
	23	N2511-G22	Screw	1
	24	N2517-G22	Screw	1
	25	52609	Pump casing	1
	26	39916	Gasket	1
	27	38552	Rotor	1
	28	34083	«O» Ring	1
	29	31756/8	Thrust washer	1
	30	52610	Spacer	1
	31	38551	Gear	1
	32	38549	Pinion	1
	33	14822	Screw	2
	34	38550	Shaft	1
	35	49722	Trim	2
	36	43121	Pipe	1

CAGIVA **MOD. WMX 125/87 CROSS**

5 TAVOLA - DRAWING TABLE - BILD

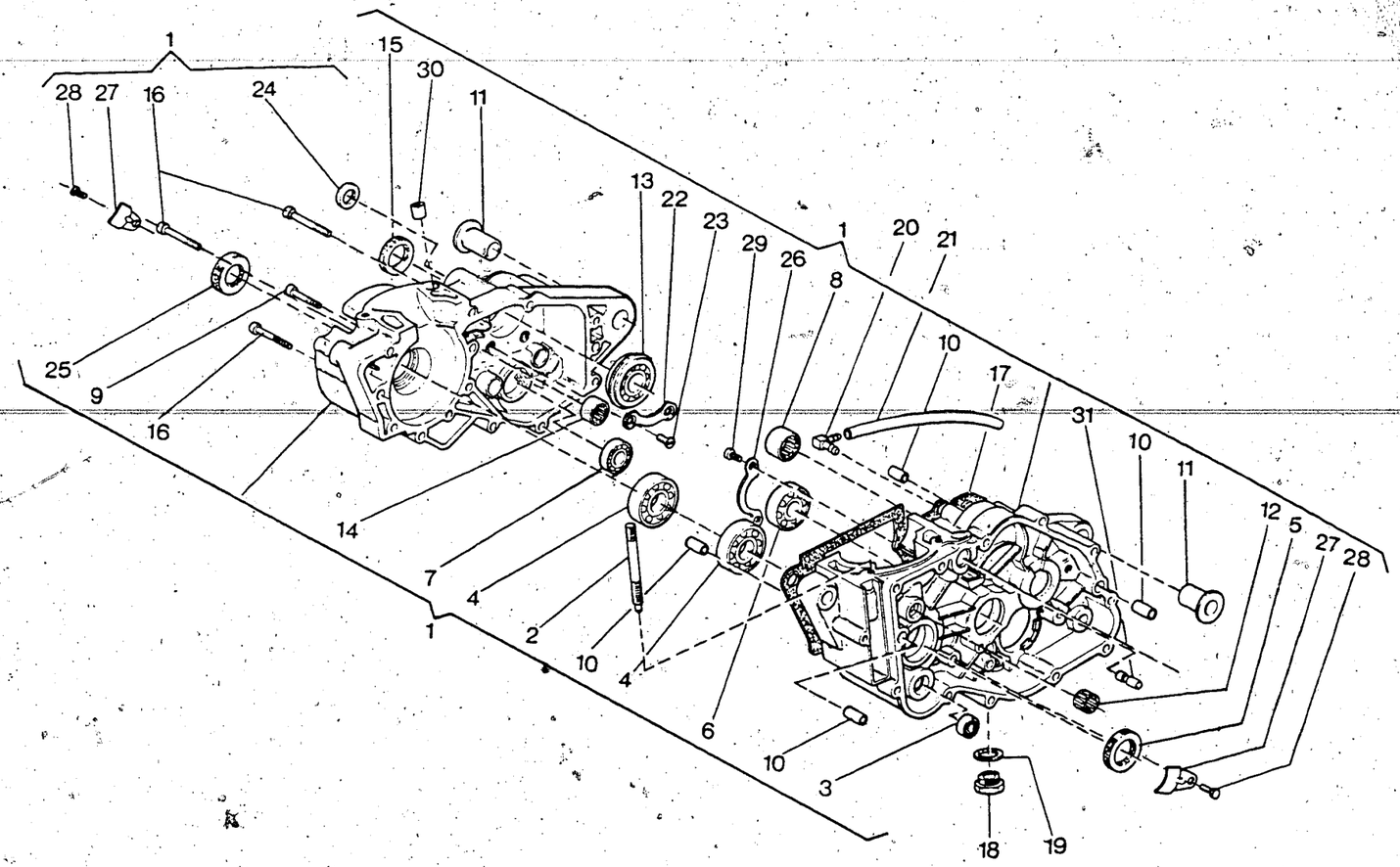

Note Notes Notes Marks	Index No. Pos. N.	Code N. Nr. Code N. Cod Code Nr.	NAME	Q.ty Q.tà Q.te M.ge
	1	53216	Crankcase assy	1
	2	34204	Stud bolt	4
	3	6597	Bearing	1
	4	38516	Bearing	2
	5	32389	Seal ring	1
	6	10290	Bearing	1
	7	2124	Bearing	1
	8	36440	Bearing	1
	9	N2512-G22	Screw	9
	10	7719	Bushing	4
	11	34067	Bushing	2
	12	31748	Needle bearing	1
	13	34064	Bearing	1
	14	37198	Needle bearing	1
	15	36357	Seal ring	1
	16	N2514-G22	Screw	3
	17	53219	Gasket	1
	18	52398	Plug	1
	19	6725/3	Washer	1
	20	19620	Union	1
	21	45022	Tube	1
	22	38518	Plate	1
	23	42643	Screw	2
	24	36653	Seal ring	1
	25	32389	Seal ring	1
	26	38515	Plate	1
	27	37136	Plate	2
	28	N1077-G22	Screw	2
	29	N2505-G22	Screw	2
	30	34475	Bushing	1
	31	38439	Pin	1

CAGIVA MOD. WMX 125/87 CROSS

6 TAVOLA - DRAWING TABLE - BILD

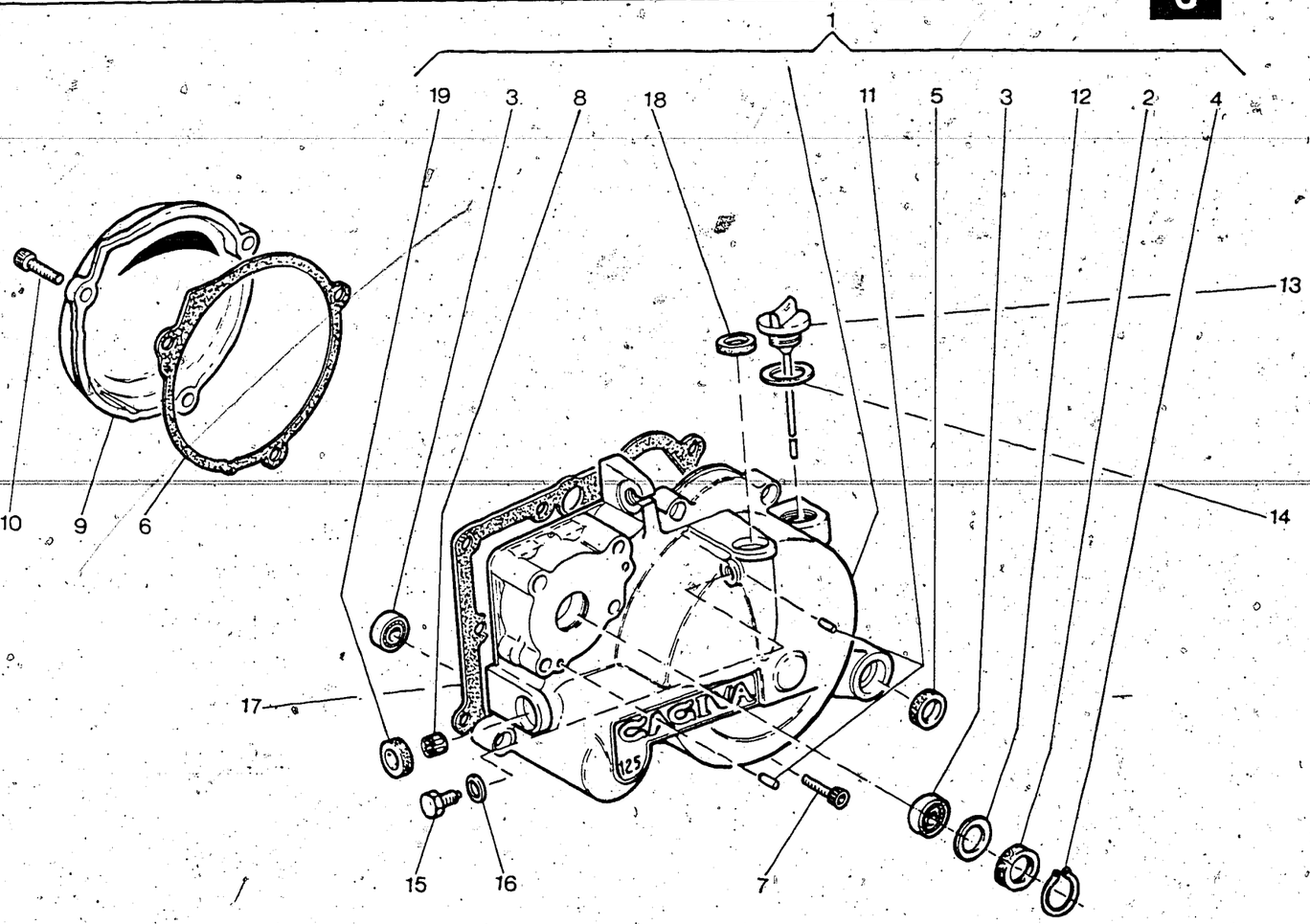

Note Notes Notes Marke	Index No. Pos. N.	Code N. Nr. Code N. Cod Code Nr.	NAME	Q.ty Q.tà Q.te M.ge
	1	52702	Left cover assy	1
	2	38215	Seal ring	1
	3	6597	Bearing	2
	4	38214	Circlip	1
	5	34451	Seal ring	1
	6	40913	Gasket	1
	7	N2509-G22	Screw	9
	8	31748	Needle bearing	1
	9	37120	Right cover	1
	10	N7335-G22	Screw	3
	11	38520	Roll	2
	12	44978	Thrust washer	1
	13	46965	Plug	1
	14	27960	Washer	1
	15	31388	Screw	1
	16	N15580	Washer	1
	17	37135	Gasket	1
	18	22946	Seal ring	1
	19	38519	Seal ring	1

CAGIVA MOD. WMX 125/87 CROSS

7 TAVOLA - DRAWING TABLE - BILD

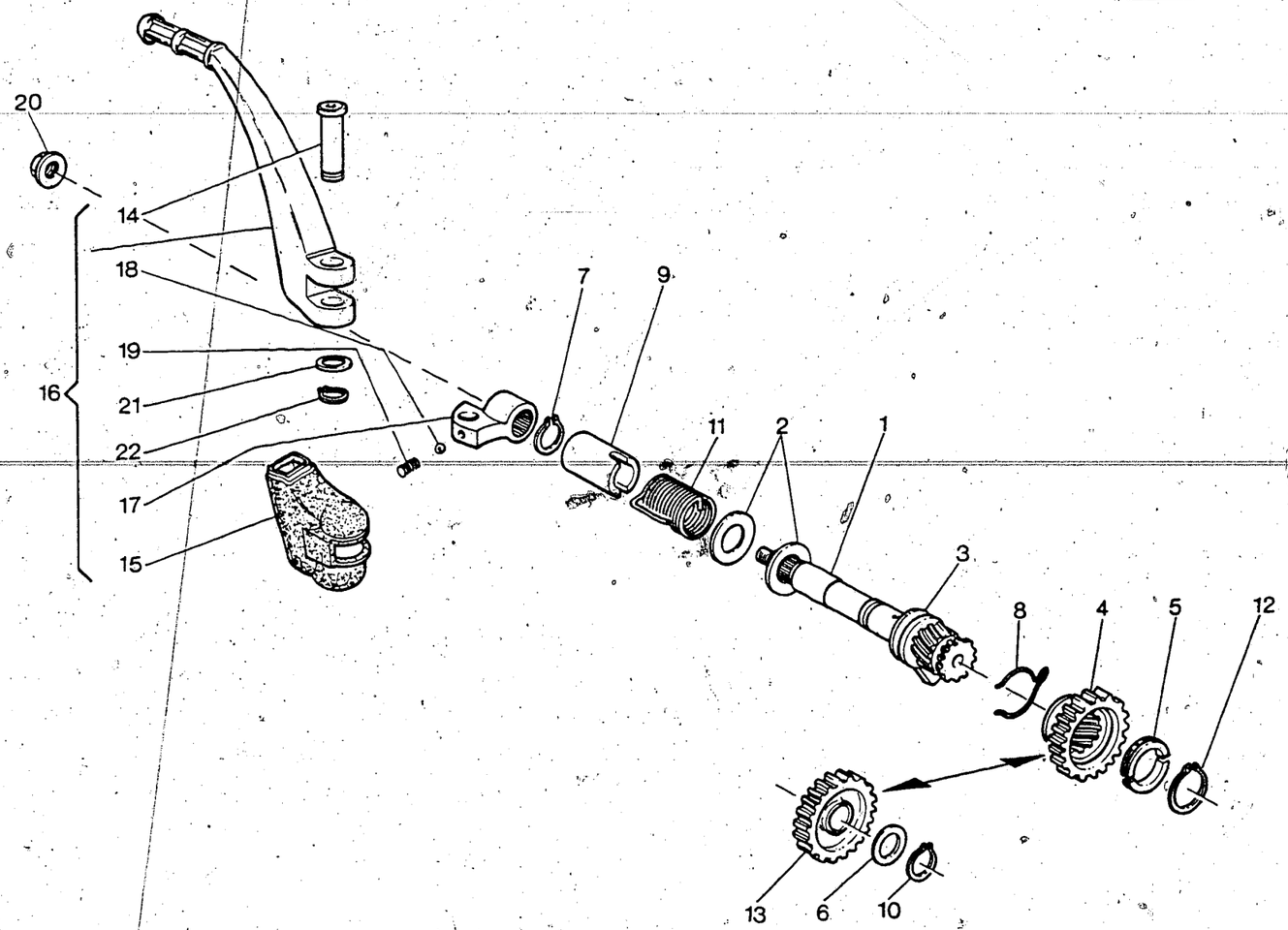

Note Notes Notes Marke	Index No. Pos. N.	Code N. Nr. Code N. Cod Code Nr.	NAME	Q.ty Q.tà Q.te M.ge
	1	38610	Starter crank shaft	1
	2	39338/5	Washer	2
	3	10904/3	Thrust-washer	1
	4	38612	Gear Z=25	1
	5	38614	Half ring	2
	6		Thrust washer	1
		4553/30	Sp. 0,3 mm.	
		4553/60	Sp. 0,6 mm.	
		4553/80	Sp. 0,8 mm.	
	7	N21206	Circlip	1
	8	38613	Spring	1
	9	38616	Spacer	1
	10	N21204-GO	Circlip	1
	11	38615	Spring	1
	12	N21213	Circlip	1
	13	38617	Gear Z=25	1
	14	38622	Pin	1
	15	38623	Cap	1
	16	38618	Starter lever assy	1
	17	38620	Clamp	1
	18	N21507	Ball 1/4"	1
	19	32203	Spring	1
	20	38624	Nut	1
	21	9671	Washer	1
	22	N21202-GO	Elastic ring	1

CAGIVA MOD. WMX 125/87 CROSS

8 TAVOLA - DRAWING TABLE - BILD

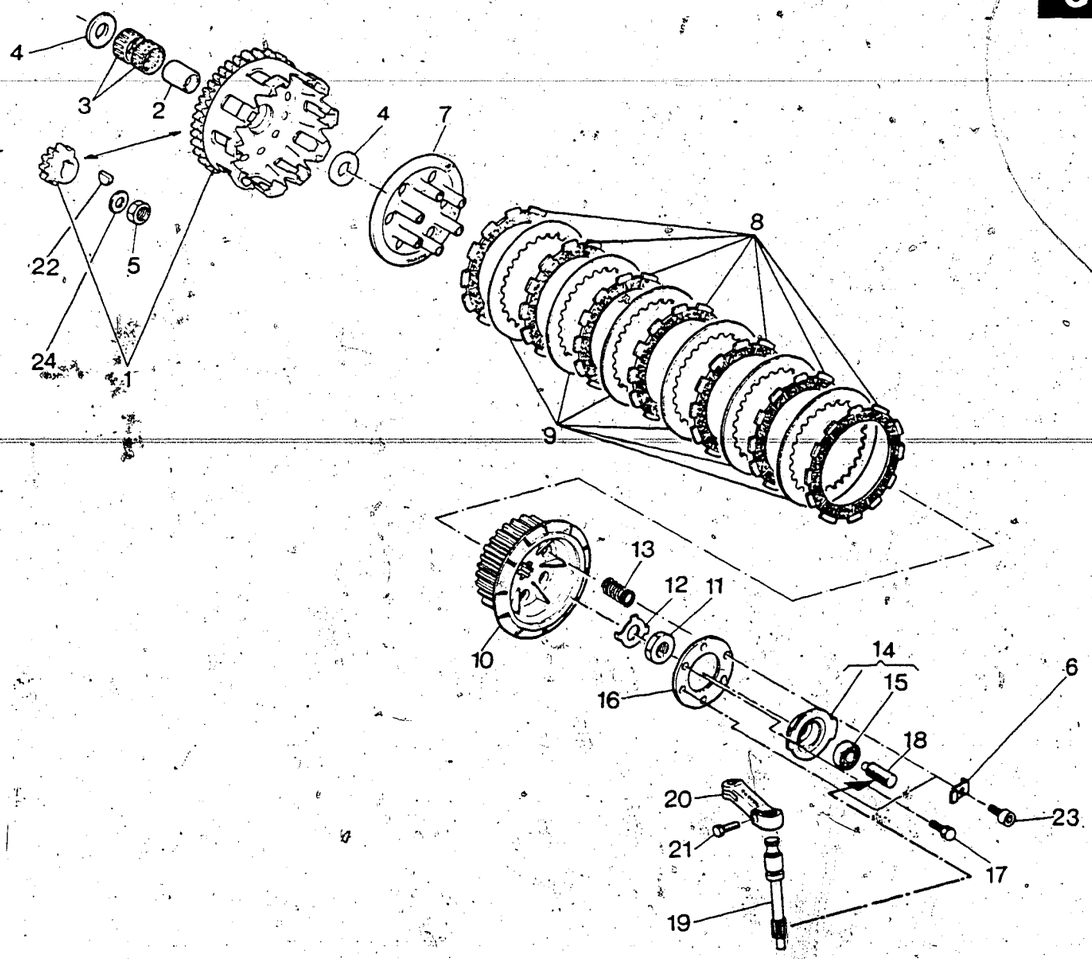

Note Notes Notes Marke	Index No. Pos. N.	Code N. Nr. Code N. Cod Code Nr.	NAME	Q.ty Q.tà Q.te M.ge
	1	39876	Set of matched primary	1
	2	34013	Spacer	1
	3	25044	Roller cage	2
	4	38388	Thrust washer	2
	5	45062	Nut	1
	6	43513	Plate	2
	7	31813	Plate	1
	8	47282	Plate	7
	9	33192	Plate	6
	10	38438	Clutch hub	1
	11	38726	Nut	1
	12	38727	Washer	1
	13	40220	Spring	6
	14	35109	Pressure spring	1
	15	35106	Bearing	1
	16	31830	Plate	1
	17	30820	Screw	4
	18	31485	Rack	1
	19	33781	Shaft	1
	20	34087	Lever	1
	21	N1061-G22	Screw	1
	22	38389	Key	1
	23	N2487-G22	Screw	2
	24	19563	Washer	1

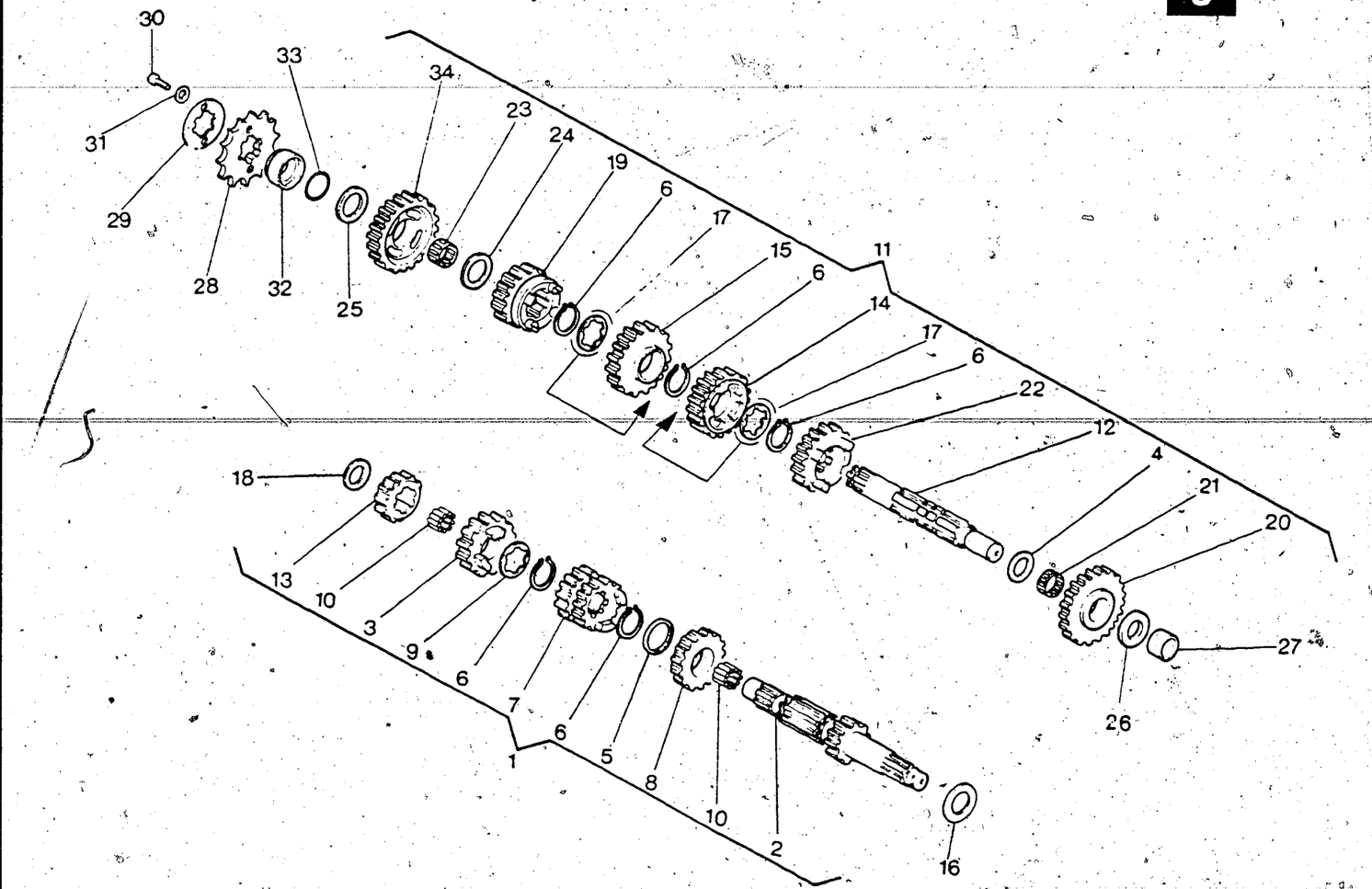

Note Notes Notes Marks	Index No. Pos. N.	Code N. Nr. Code N. Cod Code Nr.	NAME	Q.ty Q.tà Q.te M.ge
	1	49465	Main shaft assy	1
	2	39930	Main shaft Z=13	1
	3	39931	Gear, main shaft 6th Z=21	1
	4	6096/8	Thrust washer sp. 0,8 mm.	1
	5	42548	Thrust washer sp. 1,0 mm	1
	6	31768	Circlip	5
	7	47519	Gear, main shaft 3rd Z=15 and 4th Z=20	1
	8	39932	Gear counter shaft 5th Z=19	1
	9	36430/10	Thrust washer 1,0 mm	1
	10	30793	Galet	50
	11	49466	Countershaft assy	1
	12	41100	Counter shaft	1
	13	39934	Gear main shaft 2nd Z=14	1
	14	39937	Gear, counter shaft 4th Z=25	1
	15	47520	Gear, counter shaft 3rd Z=22	1
	16		Thrust washer	1
		39338/3	Sp. 0,3 mm.	
		39338/4	Sp. 0,4 mm.	
		39338/5	Sp. 0,5 mm.	
	17		Thrust washer	2
		36430/5	Sp. 0,5 mm.	
		36430/6	Sp. 0,6 mm.	
		36430/7	sp. 0,7 mm	
		36430/8	Sp. 0,8 mm.	
	18		Thrust washer	1
		38110/30	Sp. 0,3 mm.	
		38110/80	Sp. 0,8 mm.	
		38110/90	Sp. 0,9 mm	
		38110/100	Sp. 1,0 mm.	
		38110/110	Sp. 1,1 mm	
	19	39940	Gear counter shaft 6th Z=20	1
	20	40393	Gear, counter shaft 1st Z=28	1
	21	31773	Roller cage	1
	22	39939	Gear, counter shaft 5th Z=21	1
	23	36459	Roller cage	1
	24	7989/5	Thrust washer 0,5 mm.	1
	25		Thrust washer	1
		7989/3	Sp. 0,3 mm.	
		7989/8	Sp. 0,8 mm.	
		7989/10	Sp. 1,0 mm.	

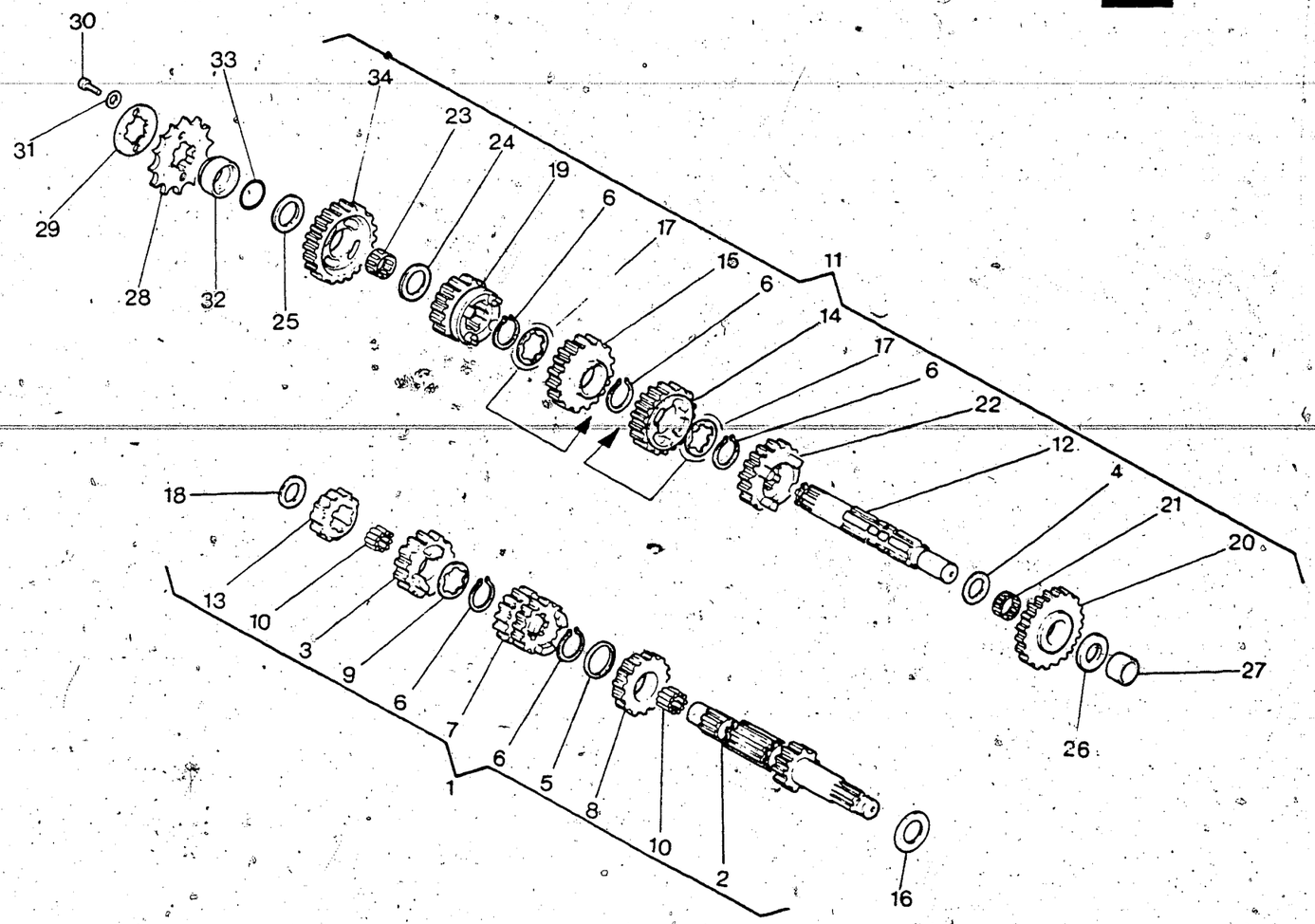

Note Notes Noten Marks	Index No. Pos. N.	Code N. Nr. Code N. Cod Code Nr.	NAME	Q.ty Q.tà Q.te M.ge
	26		Thrust washer	1
		28055/30	Sp. 0,3 mm.	
		28055/80	Sp. 0,8 mm.	
		28055/100	Sp. 1,0 mm.	
	27	36441	Inner spacer needle bearing	1
	28	33427	Drive sprocket (standard) Z=12	1
		33424	Drive sprocket Z=13	1
	29	31743	Plate	1
	30	N2482-G22	Screw	2
	31	N15503-G22	Flat washer	2
	32	33303	Spacer	1
	33	19789	«O» Ring	1
	34	39936	Gear, counter shaft 2nd Z=25	1

CAGIVA MOD. WMX 125/87 CROSS

10 TAVOLA - DRAWING TABLE - BILD

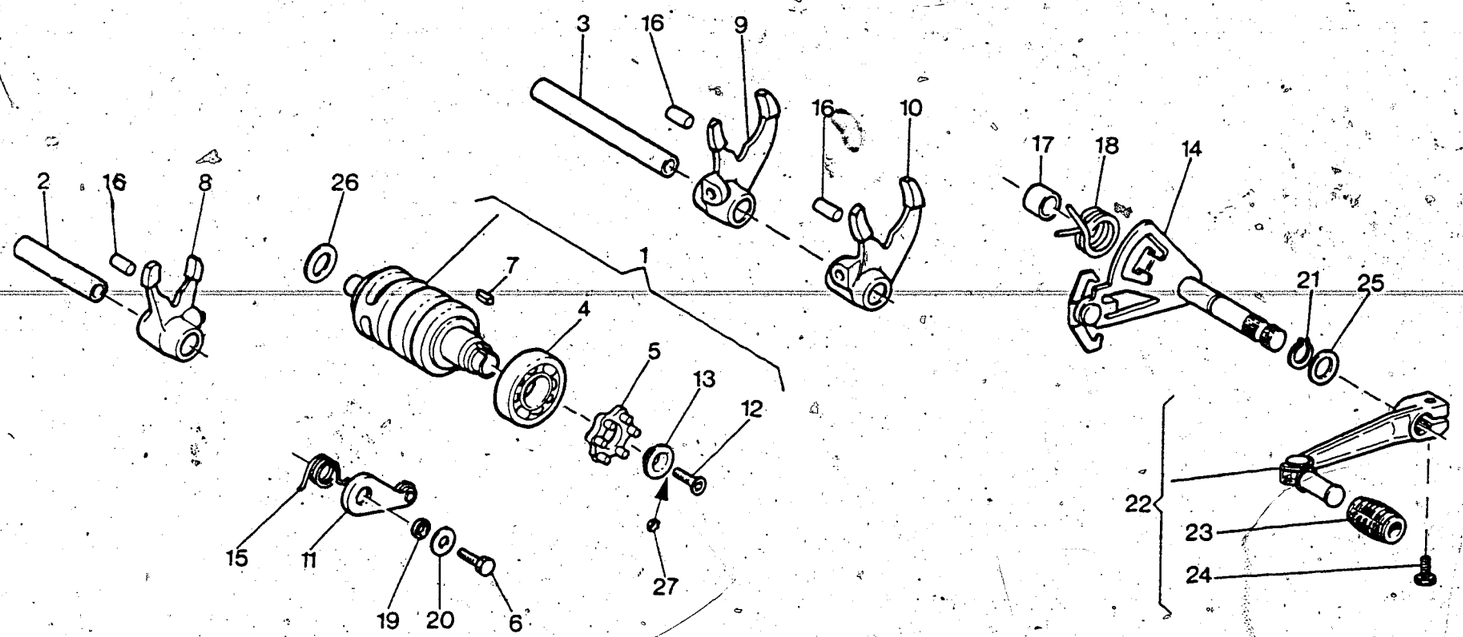

Note Notes Notes Marks	Index No. Pos. N.	Code N. Nr. Code N. Cod Code Nr.	NAME	Q.ty Q.tà Q.te M.ge
	1	41107	Driving shaft gearbox forks	1
	2	38712	Pin 5th, 6th	1
	3	38711	Pin 1st, 2nd, 3rd, 4th	1
	4	17040	Bearing	1
	5	38706	Coil	1
	6	N1079-G0	Screw	1
	7	38707	Feather	1
	8	36461	Fork, 5th and 6th	1
	9	36463	Fork, 2nd and 3rd	1
	10	36462	Fork 1st and 4th	1
	11	38721	Pawl	1
	12	47496	Screw	1
	13	38708	Washer	1
	14	38713	Shifter	1
	15	38724	Spring	1
	16	38728	Roll	3
	17	46226	Spacer	1
	18	46225	Spring	1
	19	42487	Spacer	1
	20	2709	Flat washer	1
	21	N21202-G0	Elastic ring	1
	22	47853	Crank lever assy	1
	23	29861	Rubber	1
	24	N1081-G22	Screw	1
	25	1261/100	Washer	1
	26		Thrust washer	1
		1261/20	Sp. 0,2 mm.	
		1261/30	Sp. 0,3 mm.	
		1261/50	Sp. 0,5 mm.	
		1261/80	Sp. 0,8 mm.	
		1261/100	Sp. 1,0 mm.	
	27	47160	Spring washer	1

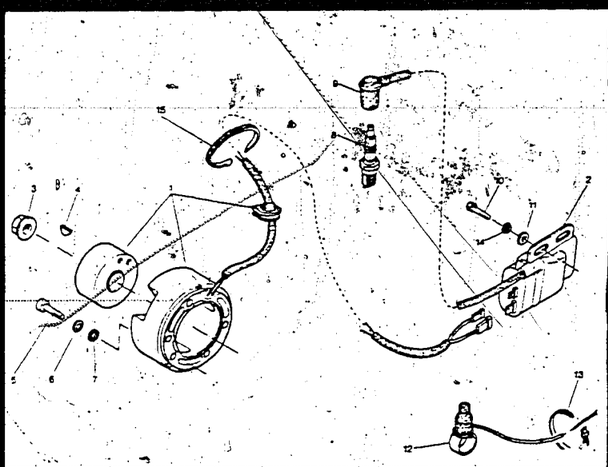

Ignition System.....C-2

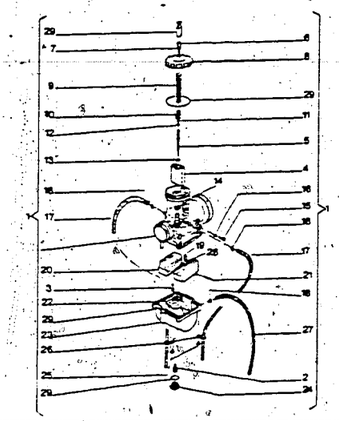

Carburetor.....C-3

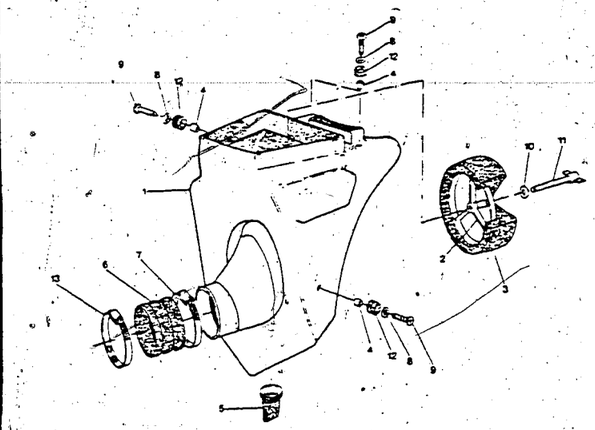

Air Filter.....C-4

CAGIVA **MOD. WMX 125/87 CROSS**

11 TAVOLA - DRAWING TABLE - BILD

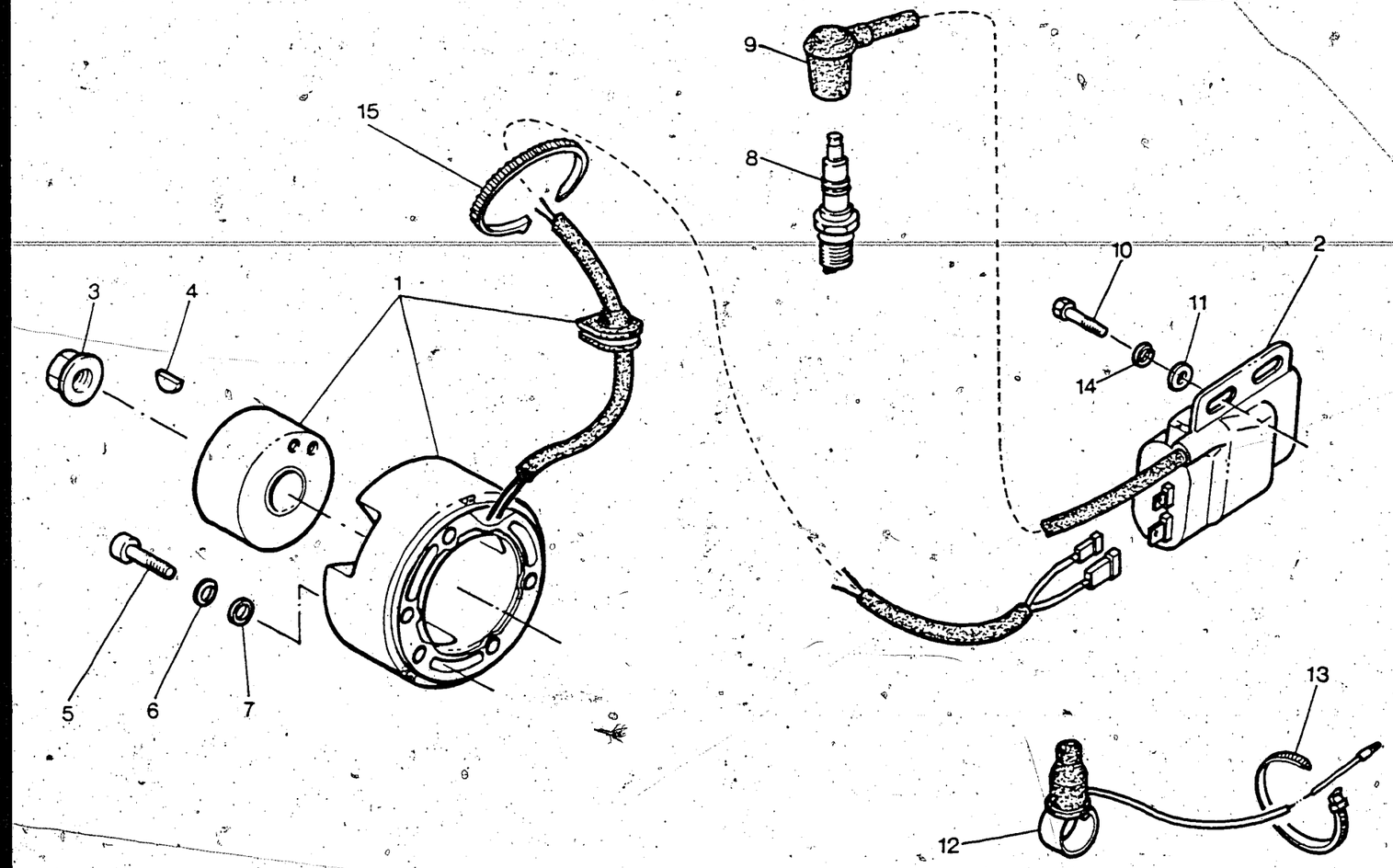

Note Notes Notes Marke	Index No. Pos. N.	Code N. Nr. Code N. Cod Code Nr.	NAME	Q.ty Q.tà Q.te M.ge
	1	39900	Electronic fly wheel assy	1
	2	48962	Spark coil - ignition module	1
	3	42023	Nut	1
	4	N21002	Key	1
	5	N2487-G22	Screw	3
	6	N15766-G22	Spring washer	3
	7	N15503-G22	Flat washer	2
	8	44314	Spark CHAMPION N82S	1
	9	23158	Cap	1
	10	N1079-G22	Screw	2
	11	2709	Flat washer	2
	12	46383	Stop button	1
	13	21810	Clamp	2
	14	N15536-G22	Spring washer	2
	15	21811	Clamp	4

CAGIVA **MOD. WMX 125/87 CROSS**

12A TAVOLA - DRAWING - TABLE - BILD

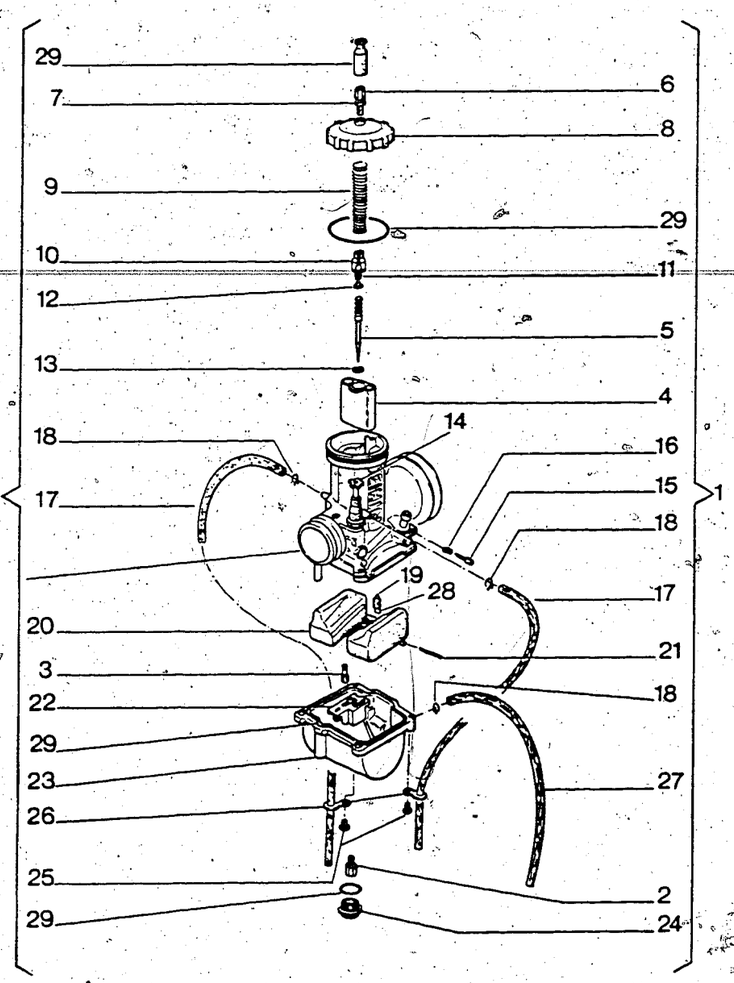

Note Notes Notes Marks	Index No. Pos. N.	Code N. Nr. Code N. Cod Code Nr.	NAME		Q.ty Q.tà Q.te M.ge
	1				
		55558	KEIHIN carburetor assy		1
	2	54271/165	Main jet (standard)	165	1
		54271/168	Main jet	168	1
		54271/170	Main jet	170 (USA)	1
		54271/175	Main jet	175	1
		54271/180	Main jet	180	1
	3	54272/68	Low speed jet (standard)	68	1
		54272/65	Idle jet	65	1
	4	55036/60	Throttle 60		1
	5	55037	Needle valve		1
	6	55038	Screw		1
	7	55039	Nut		1
	8	55040	Cover		1
	9	55041	Spring		1
	10	55042	Holder spring		1
	11	55043	Spring		1
	12	55044	Pin		1
	13	55045	Retainer		1
	14	55046	Starting device		1
	15	55047	Screw		1
	16	55048	Spring		1
	17	55049	Exhaust pipe		2
	18	55050	Spring		3
	19	55051	Float valve		1
	20	55052	Float		1
	21	55053	Pin		1
	22	55054	Cap		1
	23	55055	Chamber		1
	24	55056	Plug		1
	25	55057	Screw		4
	26	55058	Plate		2
	27	55059	Exhaust pipe		1
	28	55060	Spring		1
	29	55061	Gasket set		1

CAGIVA **MOD. WMX 125/87 CROSS**

13 TAVOLA - DRAWING TABLE - BILD

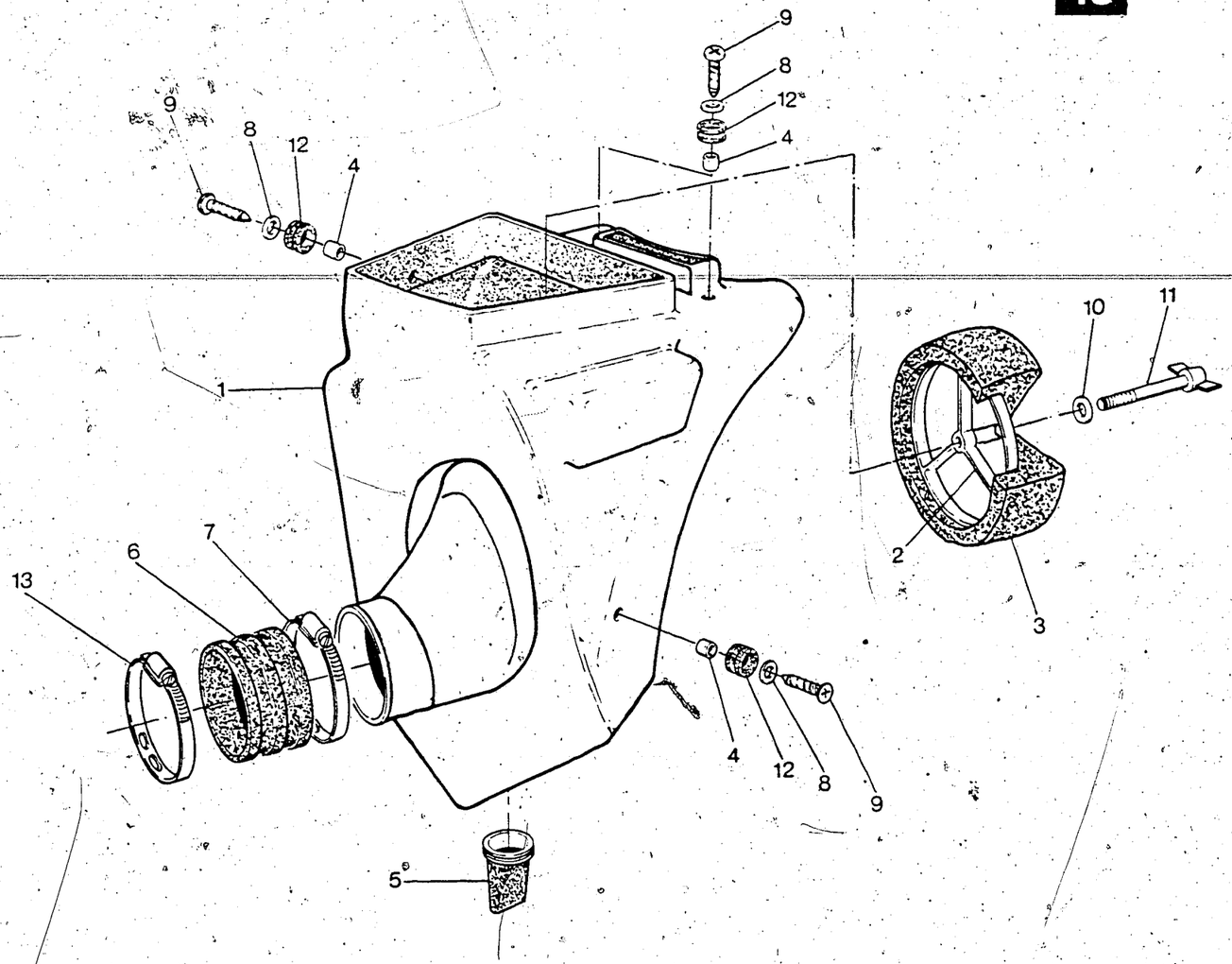

Note Notes Notes Marks	Index No. Pos. N.	Code N. Nr. Code N. Cod Code Nr.	NAME	Q.ty Q.tà Q.te M.ge
	1	52183	Air box	1
	2	37622	Cleaner cage	1
	3	44091	Air filter	1
	4	37632	Spacer	4
	5	48971	Exhaust valve	1
	6	53907	Rubber	1
	7	37906	Clamp	1
	8	N15548-G22	Washer	4
	9	37746	Screw	4
	10	N15549-G22	Flat washer	1
	11	37947	Screw	1
	12	18048	Damper bushing	4
	13	27521	Clamp	1

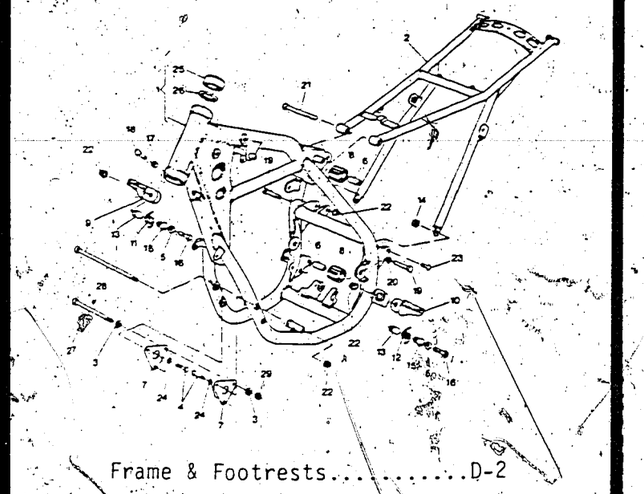

Frame & Footrests.....D-2

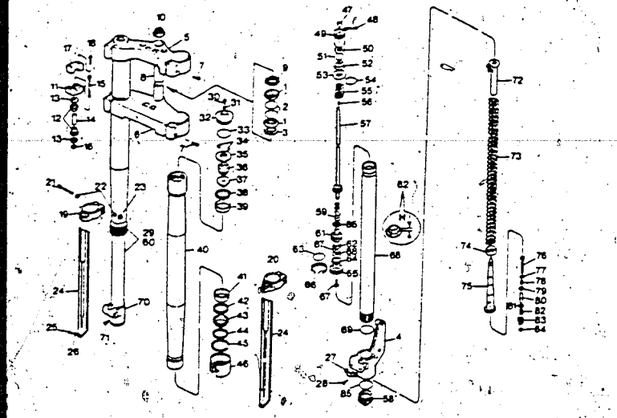

Front Fork (1/3).....D-3

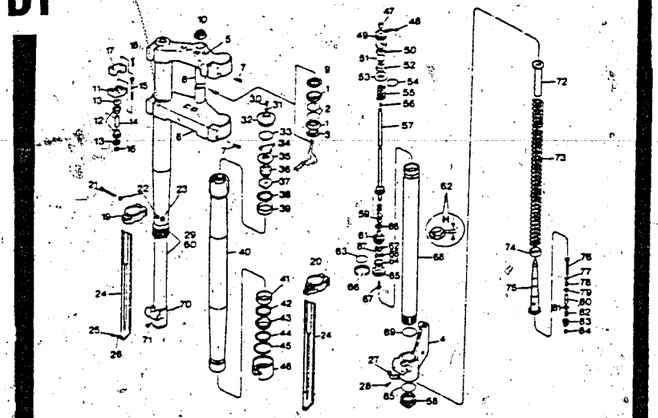

Front Fork (2/3).....D-4

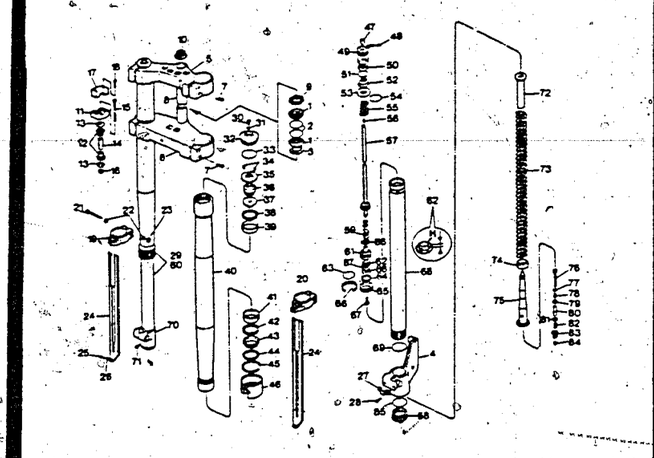

Front Fork (3/3).....D-5

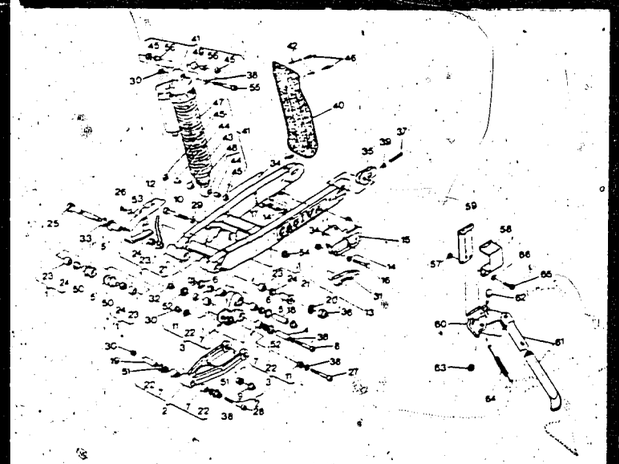

Swing Arm, Shock Abosrber,Stand,
(1/2).....D-6

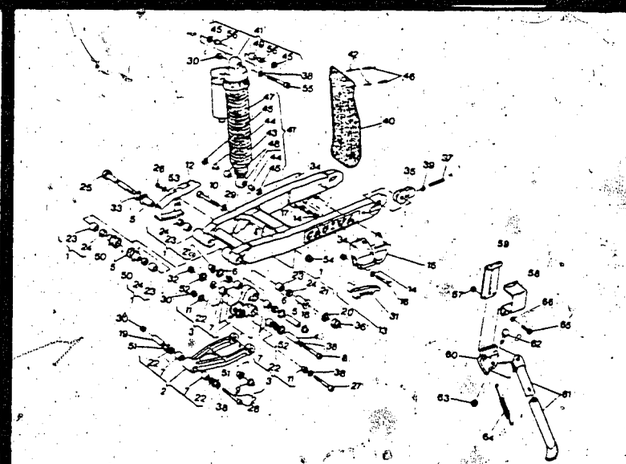

Swing Arm, Shock Absorber,Stand,
(2/2).....D-7

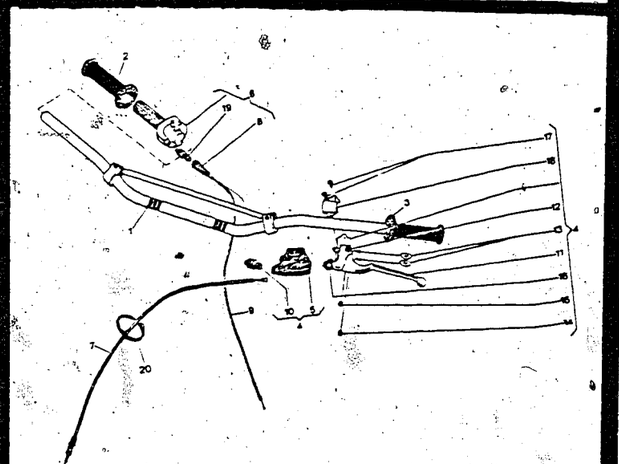

Handlebar & Controls.....D-8

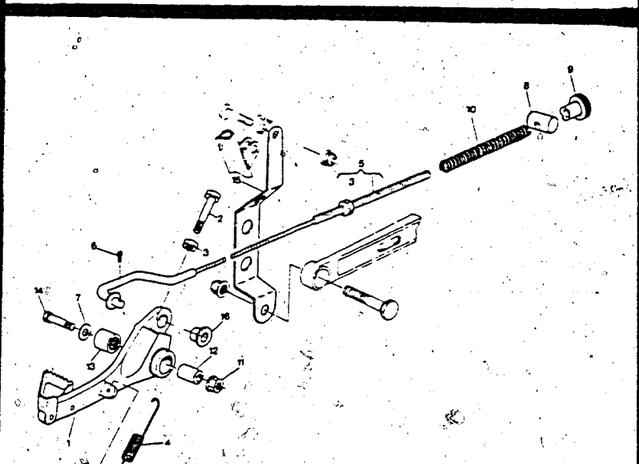

Brake Pedal.....D-9

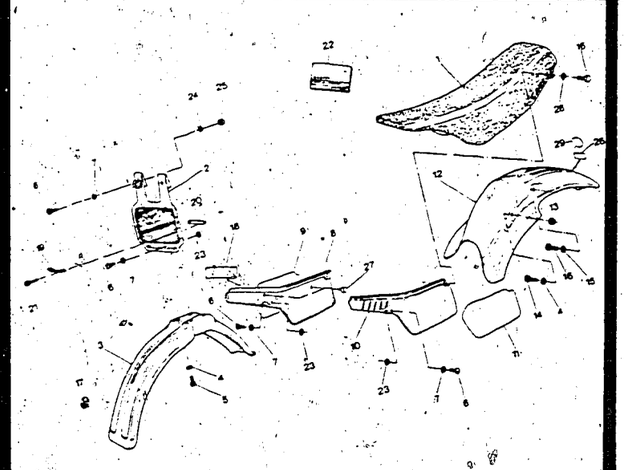

Fenders, Seat, Side Covers...D-10

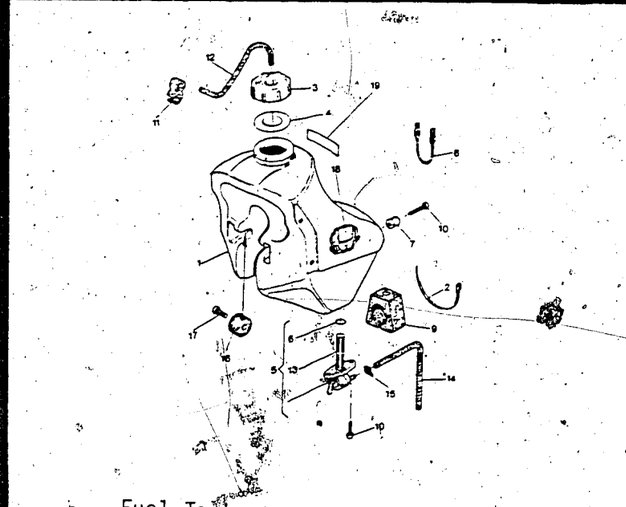

Fuel Tank.....D-11

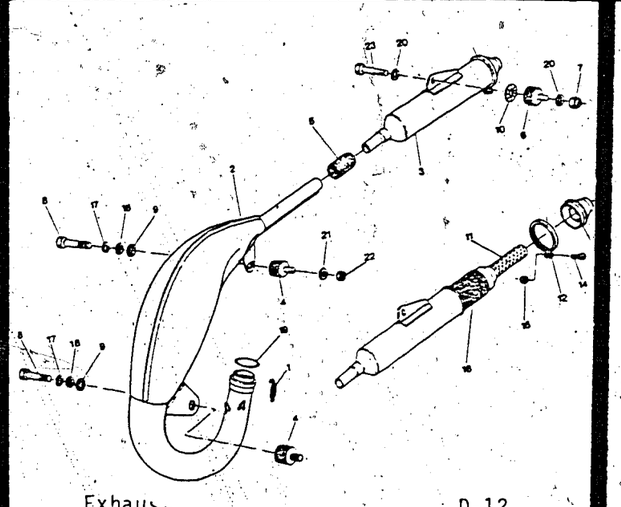

Exhaust.....D-12

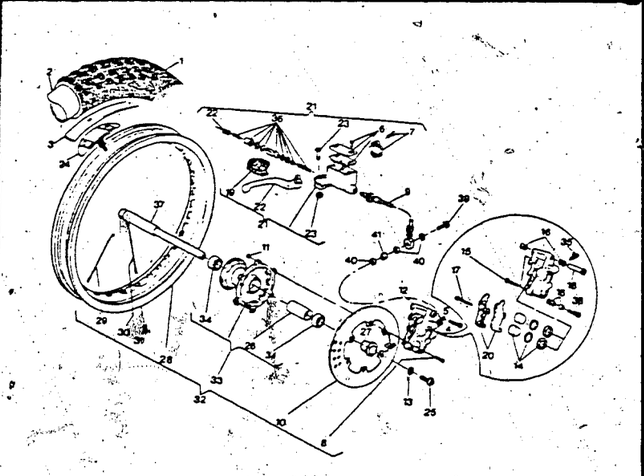

Front Wheel, Hub, Brake(1/2).D-13

CAGIVA MOD. WMX 125/87 CROSS

14 TAVOLA - DRAWING
TABLE - BILD

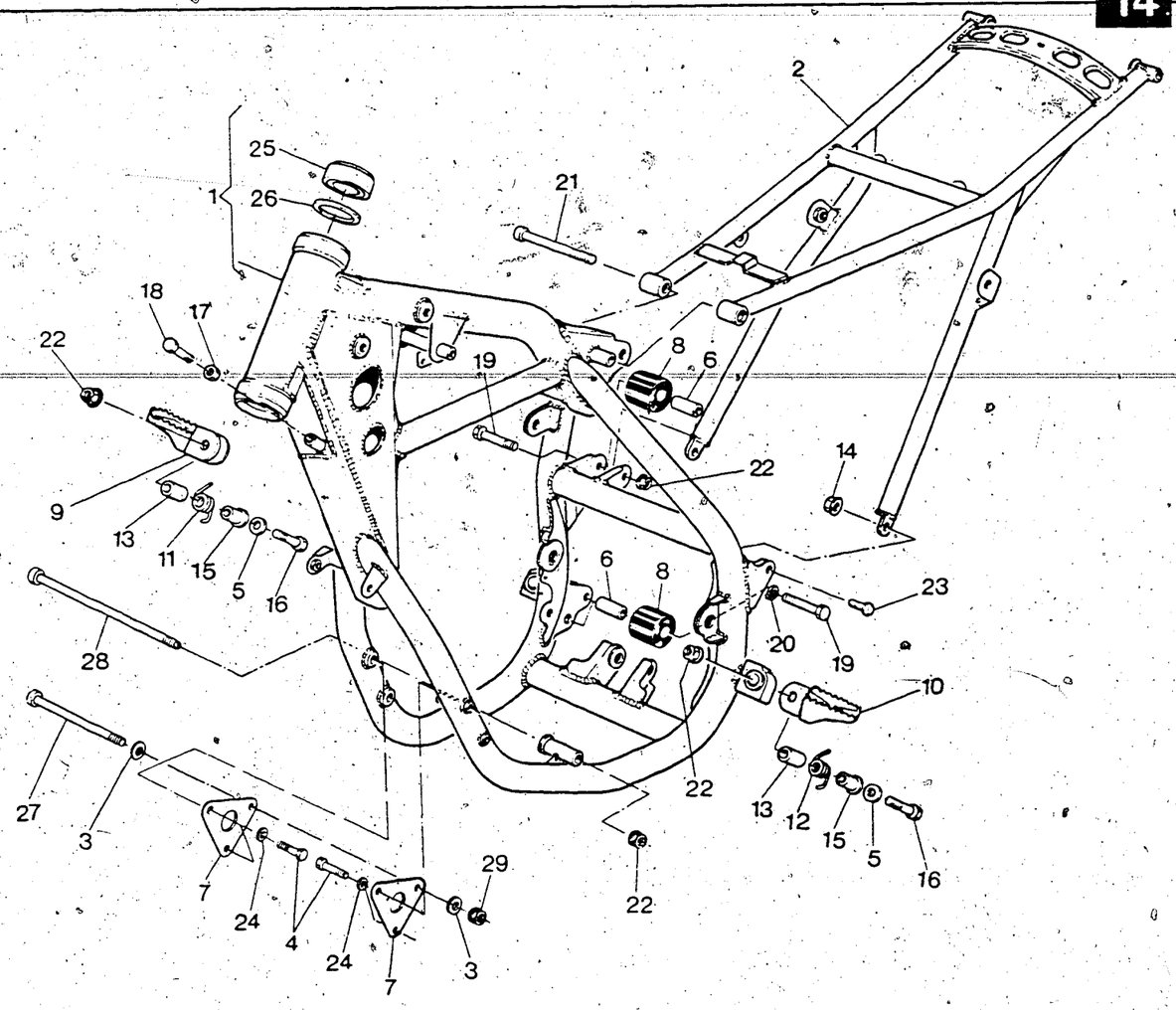

Note Notes Notes Marks	Index No. Pos. N.	Code N. Nr. Code N. Cod Code Nr.	NAME	Q.ty Q.tà Q.te M.ge
	1	43441	Frame front side assy	1
	2	47487	Frame rear side	1
	3	1911	Washer	2
	4	48838	Screw	4
	5	N15506-G22	Flat washer	2
	6	43947	Spacer	2
	7	43474	Engine front plate	2
	8	43946	Roll	2
	9	48530	R. foot rest	1
	10	48531	R. foot rest	1
	11	48533	R. spring	1
	12	48534	L. spring	1
	13	43496	Spacer	2
	14	40719	Nut	2
	15	48535	Bushing	2
	16	N1153-G22	Screw	2
	17	N15064-G22	Nut	2
	18	N1140-G22	Screw	2
	19	N1152-G22	Screw	2
	20	1676	Flat washer	1
	21	N2569-G22	Screw	1
	22	40720	Nut	4
	23	44014	Left screw	1
		48837	Right screw	1
	24	45499	Flat washer	4
	25	27142	Bearing	2
	26	27143	Washer	2
	27	43944	Front pin	1
	28	43945	Lower pin	1
	29	45498	Nut	1

D3

FRONT FORK (1/3)

CAGIVA **MOD. WMX 125/87 CROSS**

15 TAVOLA - DRAWING TABLE - BILD

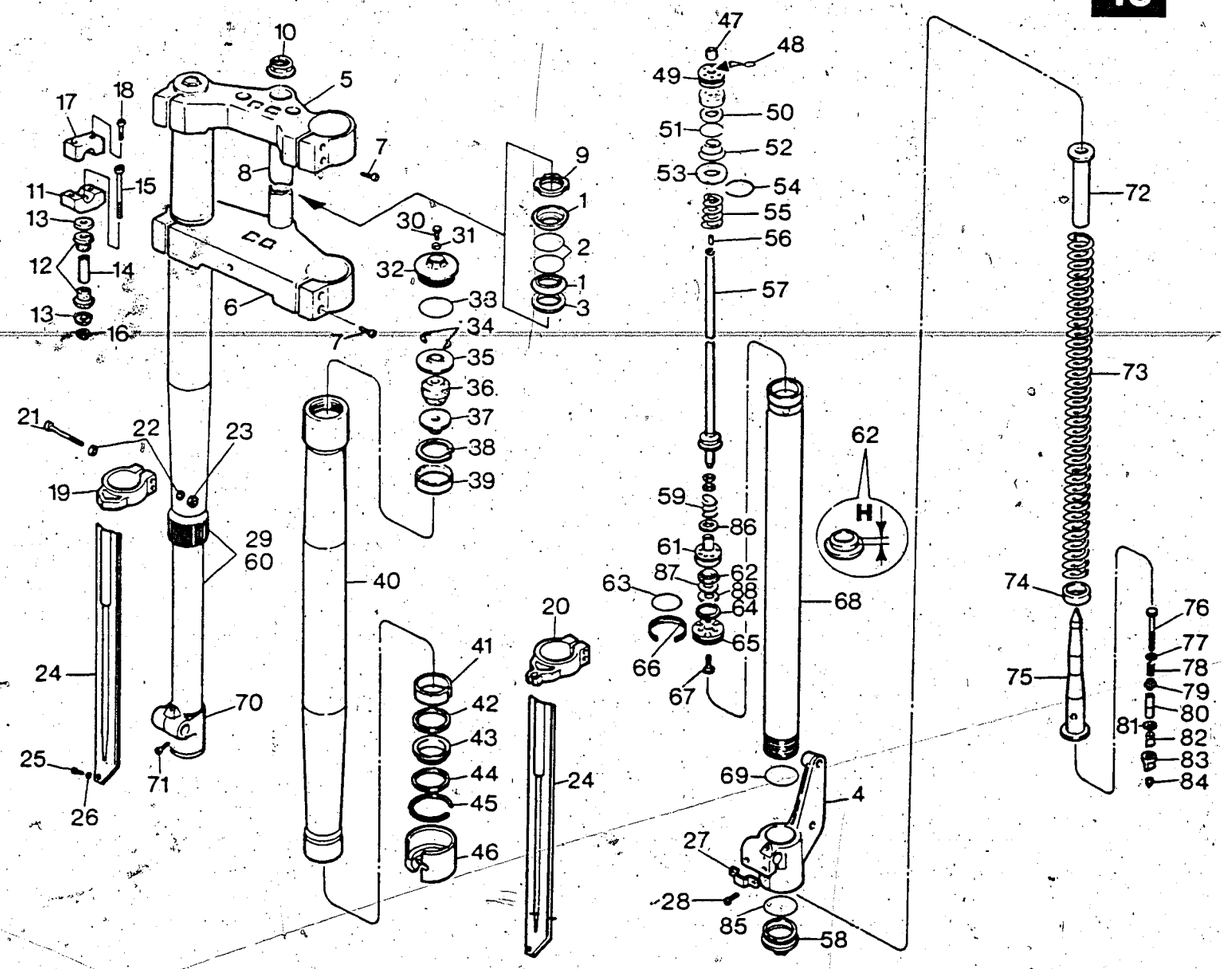

Note Notes Notes Marks	Index No. Pos. N.	Code N. Nr. Code N. Cod Code Nr.	NAME	Q.ty Q.tà Q.te M.ge
	1	29116	End plate	2
	2	29117	«O» Ring	2
	3	4646	Flat washer	1
	4	55765	Holder	1
	5	53148	Upper bracket	1
	6	53149	Stem bracket	1
	7	N2558-G22	Screw	4
	8	52345	Pin	1
	9	53153	Grooved nut	1
	10	53152	Nut	1
	11	53150	Lower clamp	2
	12	53154	Rubber	4
	13	53156	Flat washer	4
	14	53155	Spacer	2
	15	53157	Screw	2
	16	N15197-G22	Nut	2
	17	53151	Upper clamp	2
	18	N2556-G22	Screw	4
	19	53955	R. guide	1
	20	53956	L. guide	1
	21	53954	Screw	4
	22	N15503-G22	Flat washer	8
	23	N15192-G22	Nut	4
	24	53957	Guard	2
	25	N3209-G22	Screw	2
	26	N15503-G22	Flat washer	2
	27	54397	Plate	1
	28	N2510-G22	Screw	4
	29			
		55563	R. Fork assy	1
	30	53961	Screw	2
	31	53962	Gasket	2
	32	53963	Plug	2
	33	53964	«O» Ring	2
	34	53965	Half ring	4
	35	53966	Disc	2
	36	53967	Pad	2
	37	53968	Bushing	2
	38	53969	Elastic ring	2
	39	53970	Ring nut	2
	40	53971	Slider	2

For Fork Service Info See Row K

D4

FRONT FORK (2/3)

CAGIVA MOD. WMX 125/87 CROSS

15 TAVOLA - DRAWING TABLE - BILD

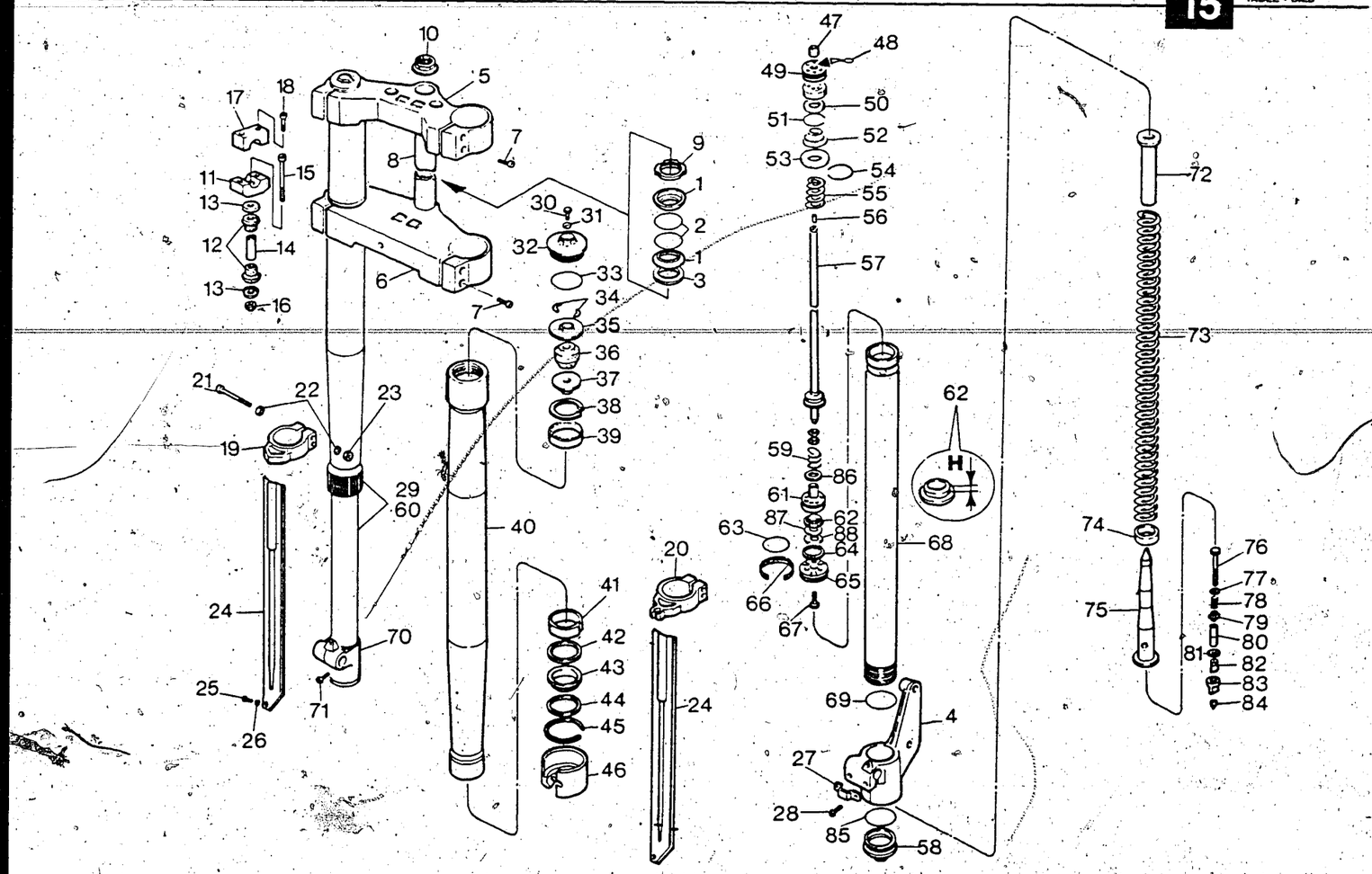

Note Notes Notes Marke	Index No. Pos. N.	Code N. Nr. Code N. Cod Code Nr.	NAME	Q.ty Q.tà Q.te M.ge
	41	53972	Upper bushing	2
	42	53973	Washer	2
	43	53974	Ring	2
	44	53975	Washer	2
	45	53976	Elastic ring	2
	46	53977	Lower bushing	2
	47	53978	Spacer	2
	48	53979	-O- Ring	2
	49	53980	Cover	2
	50	53981	Washer	2
	51	53982	Elastic ring	2
	52	53983	Spring	2
	53	53984	Washer	2
	54	53985	Elastic ring	2
	55	53986	Counterspring	2
	56	53987	Pin	2
	57	55764	Rod	2
	58	54014	Plug	2
	59	53988/2245	Spring (standard) 2,2 n° spire 45	2
		53988/2550	Spring 2,5 n° spire 50	2
		53988/2050	Spring 2,0 n° spire 50	2
		53988/1940	Spring 1,9 n° spire 40	2
	60			
		55564	L. fork leg assy	1
	61	53990	Bushing	2
	62	53991/20	Ring (standard) H=2,0	2
		53991/24	Ring H=2,4	2
		53991/22	Ring H=2,2	2
		53991/18	Ring H=1,8	2
		53991/16	Ring H=1,6	2
		53991/14	Ring H=1,4	2

CAGIVA MOD. WMX 125/87 CROSS

15 TAVOLA - DRAWING TABLE - BILD

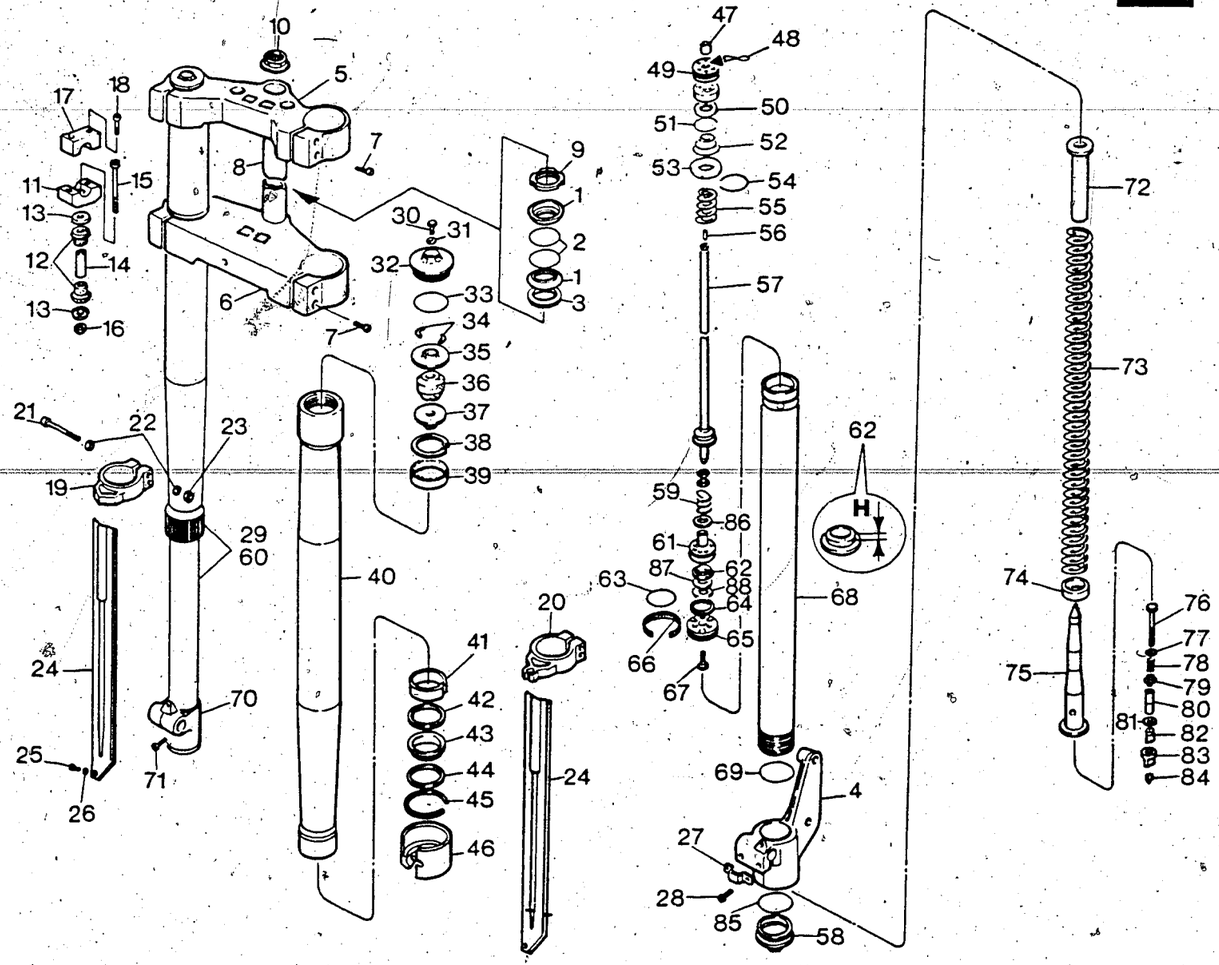

Note Notes Notes Marke	Index No. Pos. N.	Code N. Nr. Code N. Cod Code Nr.	NAME	Q.ty Q.tà Q.te M.ge
	63	53992	«O» Ring	2
	64	53993	Elastic ring	2
	65	53994	Bushing	2
	66	53995	Ring	2
	67	53996	Screw	2
	68	53997	Fork tube	2
	69	53998	«O» Ring	2
	70	53999	Lower ring nut	1
	71	54000	Screw	2
	72	54001	Upper holder	2
	73	54002/4244	Spring 4,2 n° spire 44 (standard)	2
		54002/4548	Spring 4,5 n° spire 48	2
		54002/4448	Spring 4,4 n° spire 48 (USA)	2
		54002/4451	Spring 4,4 n° spire 51	2
		54002/4248	Spring 4,2 n° spire 48	2
	74	54015/50	Spacer (standard) S=5	2
		54015/25	Spacer S=2,5	2
		54015/100	Spacer S=10	2
	75	54003	Bushing	2
	76	54004	Screw	2
	77	54005	Washer	2
	78	54006	Spring	2
	79	54007	Holder spring	2
	80	54008	Spacer	2
	81	54009	Washer	2
	82	54010	Bushing	2
	83	54011	Bushing	2
	84	54012	Pin	2
	85	54013	«O» Ring	2
	86	55774/1	Washer Ø13xØ19x0,1	2
		55774/3	Washer Ø13xØ19x0,3	2
		55774/5	Washer Ø13xØ19x0,5	2
		55774/10	Washer Ø13xØ19x1,0	2
	87	55775	Washer	2
	88	55776/5	Washer Ø18xØ25x0,5	2
		55776/3	Washer Ø18xØ25x0,3	2

CAGIVA MOD. WMX 125/87 CROSS

16 TAVOLA - DRAWING TABLE - BILD

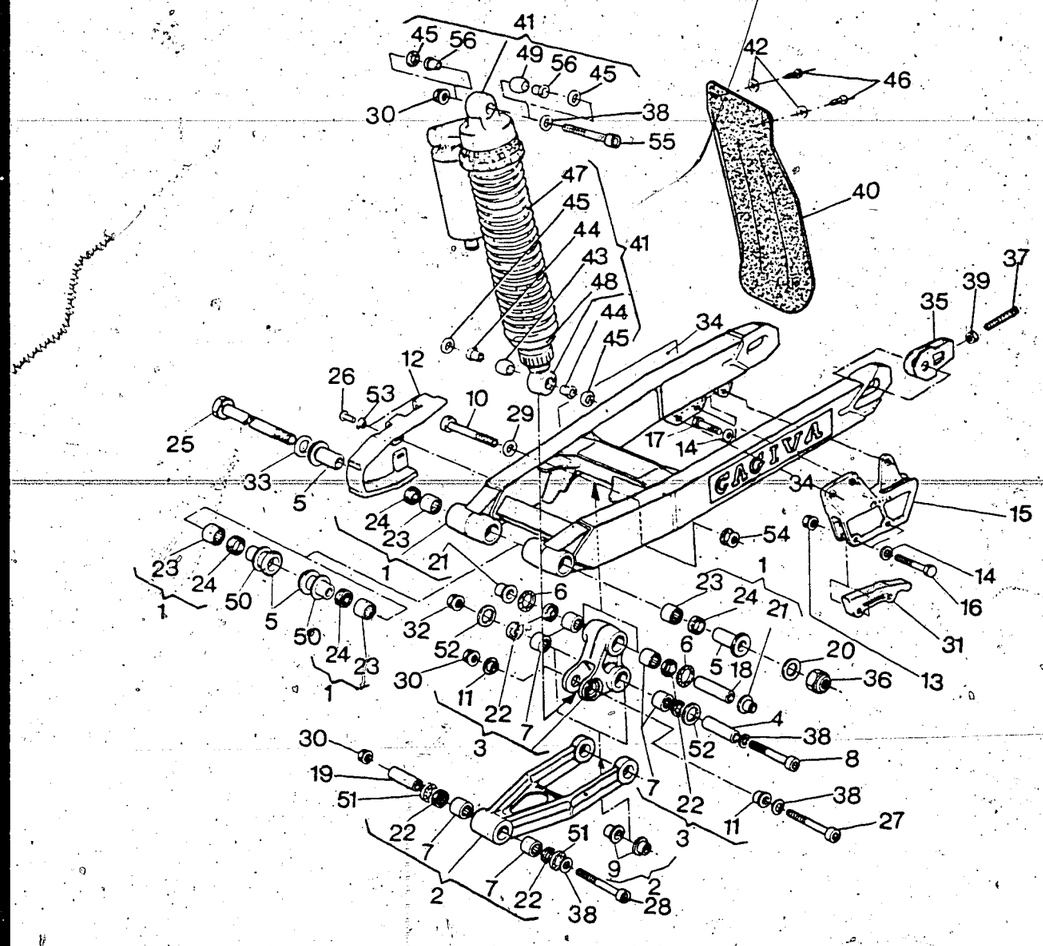

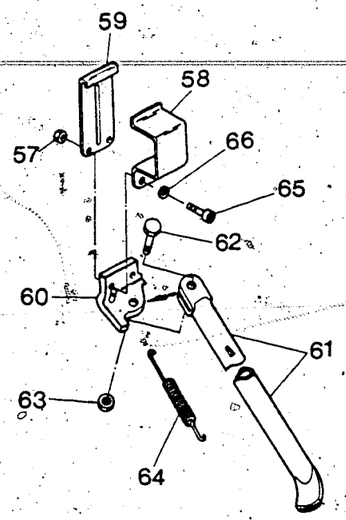

Note Notes Notes Marke	Index No. Pos. N.	Code N. Nr. Code N. Cod Code Nr.	NAME	Q.ty Q.tà Q.te M.ge
	1	43524	Swing arm assy	1
	2	43527	Tie rod assy	1
	3	43530	Compensator assy	1
	4	43534	Pin	1
	5	41707	Bushing	4
	6	42024	Feltseal	2
	7	38956	Needle bearing	6
	8	48435	Pin	1
	9	42028	Bushing	2
	10	48436	Pin	1
	11	42030	Bushing	11
	12	43159	Chain slider	1
	13	41512	Nut	2
	14	N15504-G22	Flat washer	5
	15	41712	Chain guide	1
	16	N1089-G22	Screw	2
	17	N1079-G22	Screw	3
	18	42027	Pin	1
	19	43538	Pin	1
	20	N15508-G22	Flat washer	1
	21	42029	Bushing	2
	22	35900	Seal ring	6
	23	32064	Roller cage	4
	24	32065	Seal ring	4
	25	43526	Pin	1
	26	33564	Screw	2
	27	46171	Pin	2
	28	43535	Pin	1
	29	5934	Washer	1
	30	42022	Nut	3
	31	41714	Lower guide block	2
	32	42022	Nut	1
	33	20066	Flat washer	1

CAGIVA MOD. WMX 125/87 CROSS

16 TAVOLA - DRAWING TABLE - BILD

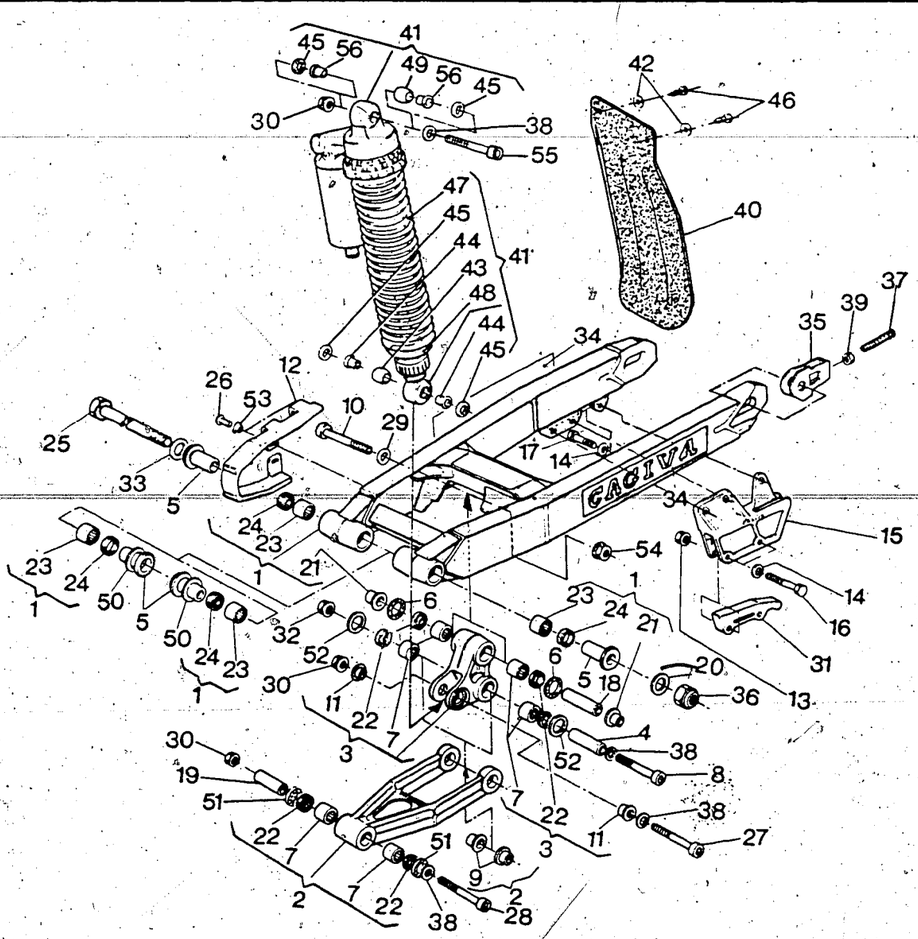

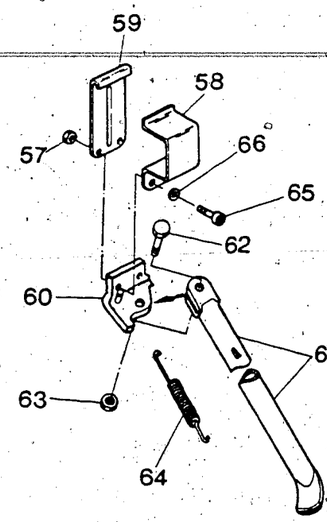

Note Notes Notes Marke	Index No. Pos. N.	Code N. Nr. Code N. Cod Code Nr.	NAME	Q.ty Q.tà Q.te M.ge
	34	46140	«CAGIVA» trim	2
	35	47571	Chain adjuster	2
	36	N15213-G22	Nut	1
	37	48770	Screw	2
	38	4167	Washer	3
	39	N15064-G22	Nut	2
	40	38115	Guard	1
	41			
		55560	Shock absorber assy	1
	42	N15548-G22	Flat washer	2
	43	38764	Bearing	1
	44	38768	Bushing	2
	45	38767	Feltseal	4
	46	37745	Screw	2
	47			
		55788	Spring	1
	48	43541	Lower ring nut	1
	49	43726	Bearing	1
	50		Thrust washer	2
		32069/80	Sp. 0,8 mm.	
		32069/100	Sp. 1,0 mm.	
		32069/120	Sp. 1,2 mm.	
	51	45497	Feltseal	2
	52	46172	Washer	2
	53	45495	Bushing	2
	54	42023	Nut	1
	55	43537	Pin	1
	56	46173	Bushing	2
	57	40720	Nut	2
	58	49495	Outer plate	1
	59	49494	Inner plate	1
	60	49492	Side stand plate	1
	61	49487	Side stand	1
	62	49493	Screw	1
	63	N15066-G22	Nut	1
	64	32907	Spring	1
	65	N2557-G22	Screw	2
	66	N15506-G22	Washer	2

CAGIVA **MOD. WMX 125/87 CROSS**

17 TAVOLA - DRAWING TABLE - SHLD

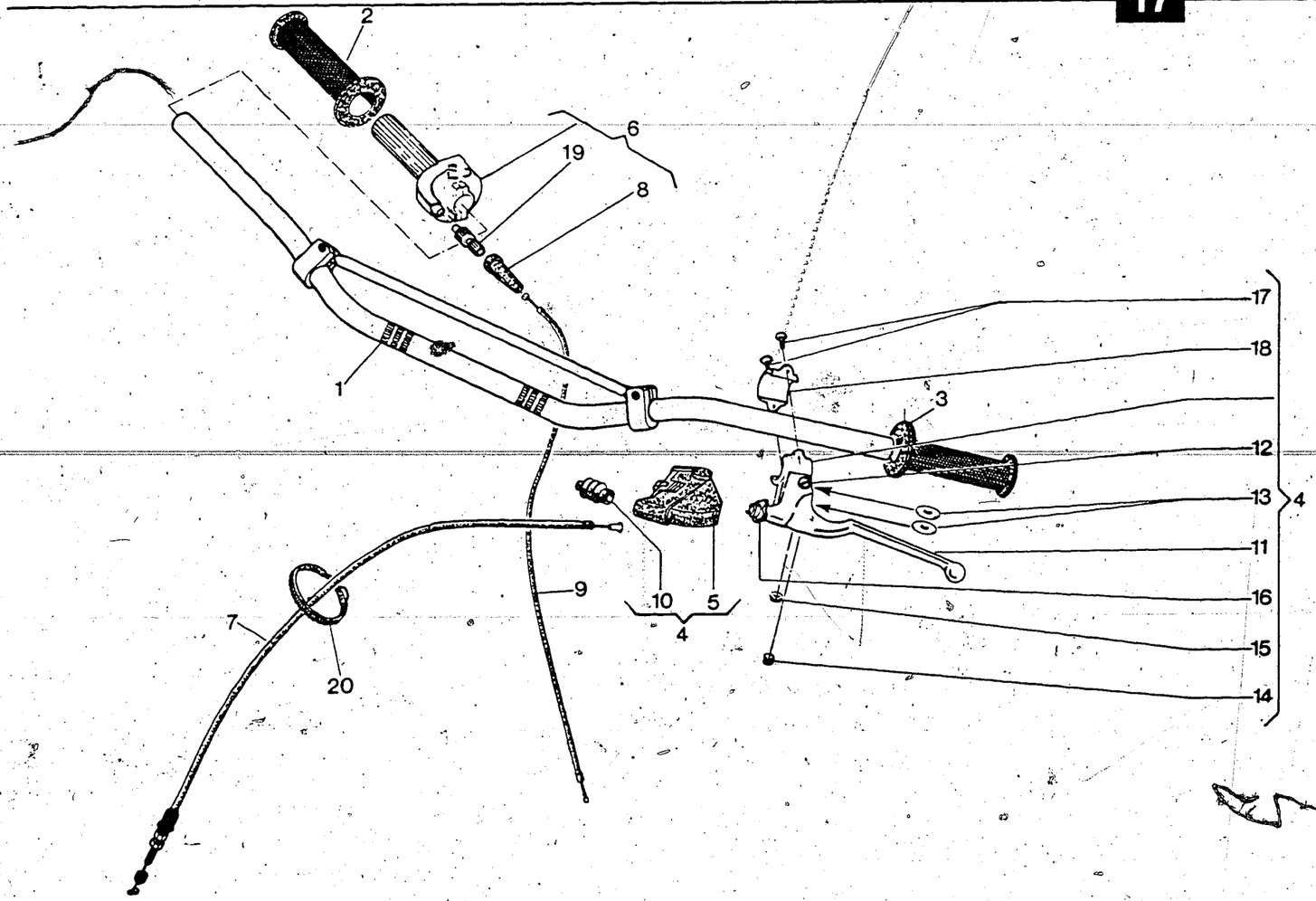

Note Notes Notas Marke	Index No. Pos. N.	Code N. Nr. Code N. Cod Code Nr.	NAME	Q.ty Q.tà Q.te M.ge
*	1	48661	Handlebar	1
*		54274	Handlebar	1
	2	30343	Handle grip R.	1
	3	30344	Handle grip L.	1
	4	48913	Clutch control assy	1
	5	48917	Lever guard	1
	6	40684	Throttle control assy.	1
	7	48888	Clutch cable assy	1
	8	38805	Cap	1
	9	53908	Throttle cable assy	1
	10	48918	Guard	1
	11	48915	Clutch lever	1
	12	38797	Screw	1
	13	38798	Washer	2
	14	38802	Retainer	1
	15	38799	Nut	1
	16	48916	Compl. Adjuster	1
	17	N4103-G19	Screw	2
	18	38801	Holder	1
	19	46145	Compl. Adjuster	1
	20	21812	Clamp	1
			*: In alternative	

BRAKE PEDAL

CAGIVA MOD. WMX 125/87 CROSS

18 TAVOLA - DRAWING TABLE - BILD

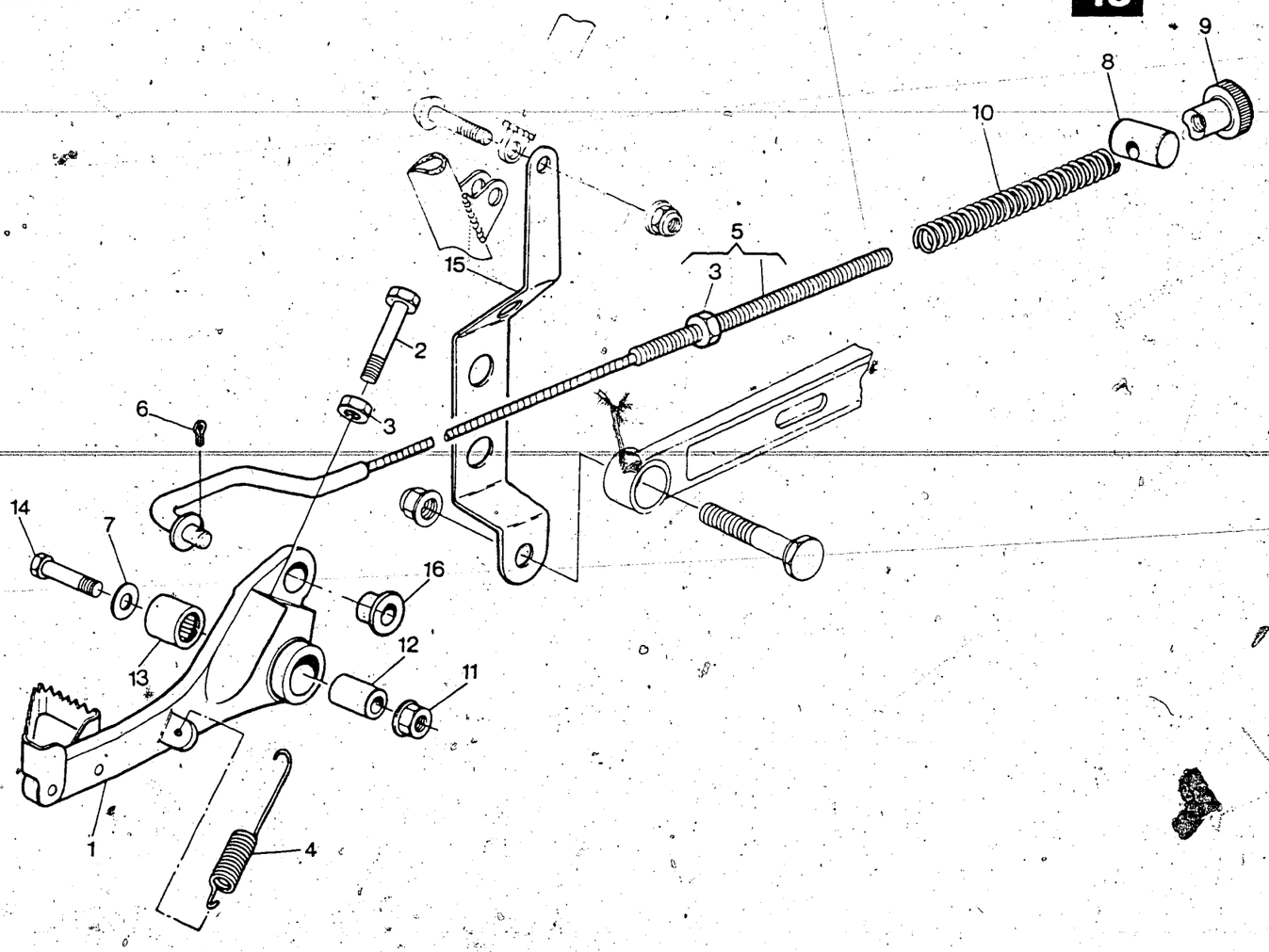

Note Notes Notes Marks	Index No. Pos. N.	Code N. Nr. Code N. Cod Code Nr.	NAME	Q.ty Q.tà Q.te M.ge
	1	43825	Lever assy	1
	2	N1081-G22	Screw	1
	3	N15033-G22	Nut	2
	4	43587	Spring	1
	5	48752	Tie-rod	1
	6	N20067-G22	Cotter pin	1
	7	N15504-G22	Washer	1
	8	12723	Retainer	1
	9	6925	Knurled nut	1
	10	48753	Spring	1
	11	41512	Nut	1
	12	42673	Spacer	1
	13	42672	Bearing case	1
	14	N1085-G22	Screw	1
	15	48840	Plate	1
	16	43584	Bushing	1

CAGIVA MOD. WMX 125/87 CROSS

19 TAVOLA - DRAWING TABLE - BILD

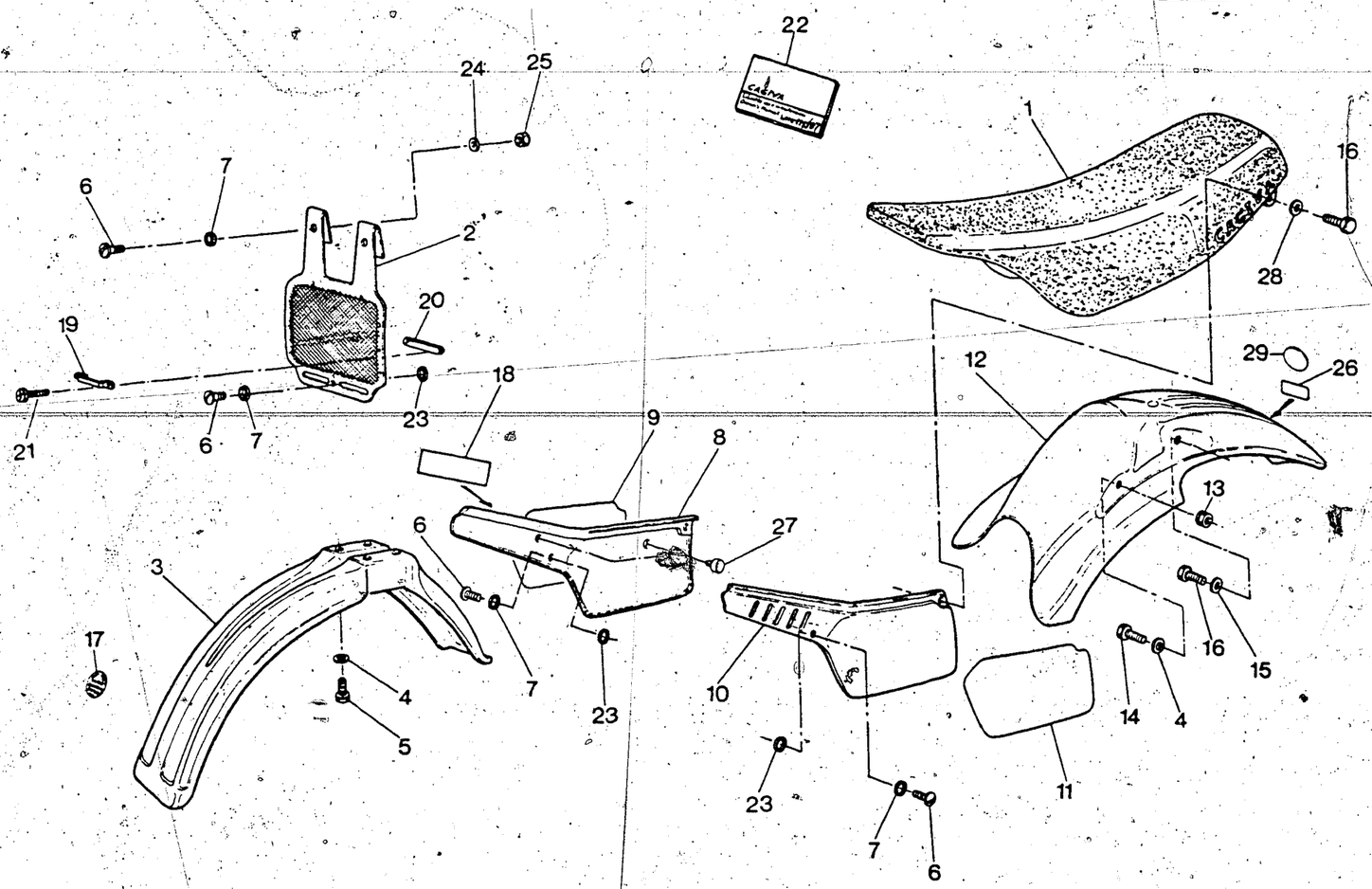

Note Notes Notes Marks	Index No. Pos. N.	Code N. Nr. Code N. Cod Code Nr.	NAME	Q.ty Q.tà Q.te M.ge
	1	48408	Seat assy	1
	2	43747	Front number holder	1
	3	43738	Front fender	1
	4	N15549-G22	Flat washer	6
	5	N1078-G22	Screw	4
	6	37636	Screw	5
	7	37656	Washer	5
	8	48414	Right panel	1
	9	50019	R. trim	1
	10	48415	Left panel	1
	11	50020	L. trim	1
	12	48413	Rear fender	1
	13	N15193-G22	Nut	2
	14	N1079-G22	Screw	2
	15	N15551-G22	Flat washer	2
	16	N1537-G22	Screw	4
	17	49723	Trim	2
	18	43636	Trim	1
	19	45491	Pipe slide	1
	20	45492	Plate	1
	21	N7104-G19	Screw	2
	22			
		55496	Owner's service and tuning manual	1
	23	30232	Spring washer	3
	24	N15549-G22	Flat washer	2
	25	N15193-G22	Nut	2
	26	39031	Adhesive-Recommendations	1
	27	45490	Rubber	2
	28	1911	Flat washer	2

D11 FUEL TANK

CAGIVA MOD. WMX 125/87 CROSS

20 TAVOLA - DRAWING TABLE - BILD

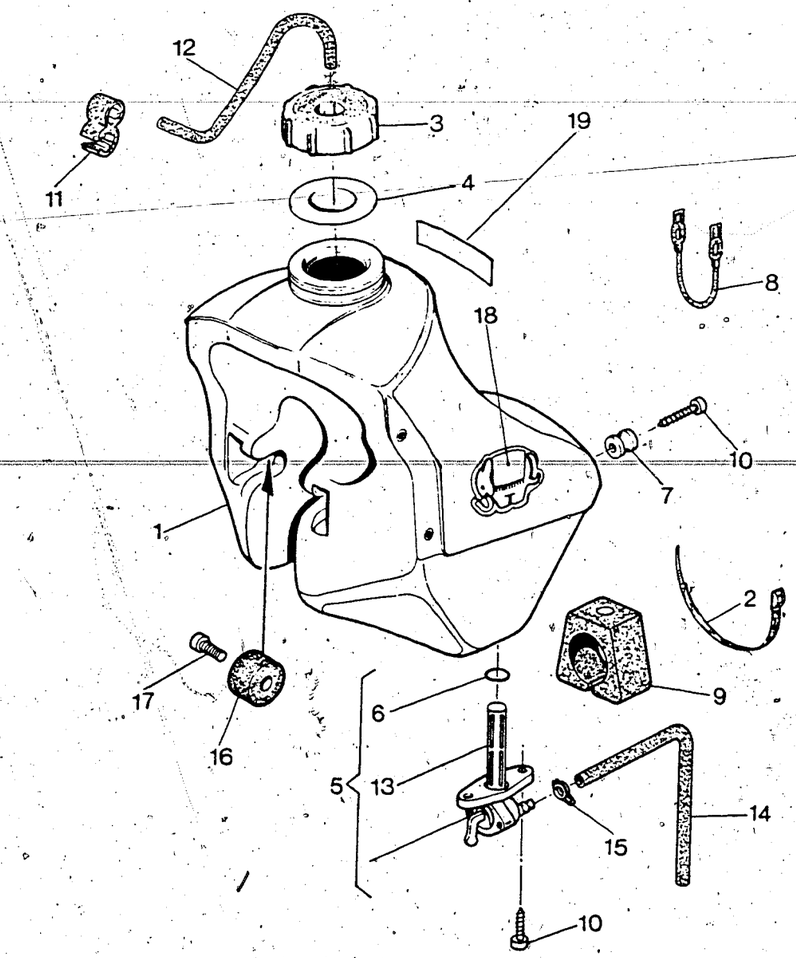

Note Notes Notes Marke	Index No. Pos. N.	Code N. Nr. Code N. Cod Code Nr.	NAME	Qty Qtà Qtà M.ge
	1	49933	Gas tank	1
	2	21812	Clamp	1
	3	32102	Plug	1
	4	31060	Gasket	1
	5	43592	Gas valve assy	1
	6	1199	«O» Ring	1
	7	37637	Bushing	2
	8	37650	Elastic	1
	9	40767	Rear bumper	1
	10	37745	Screw	4
	11	33536	Connection	1
	12	38752	Exhaust pipe	1
	13	38748	Fuel filter	1
	14	43593	Gas line	1
	15	18922	Elastic ring	1
	16	40813	Front bumper	2
	17	N7350-G22	Screw	2
	18	46139	Trim	2
	19	50018	«MADE IN ITALY» trim	1

CAGIVA MOD. WMX 125/87 CROSS

21 TAVOLA - DRAWING TABLE - BILD

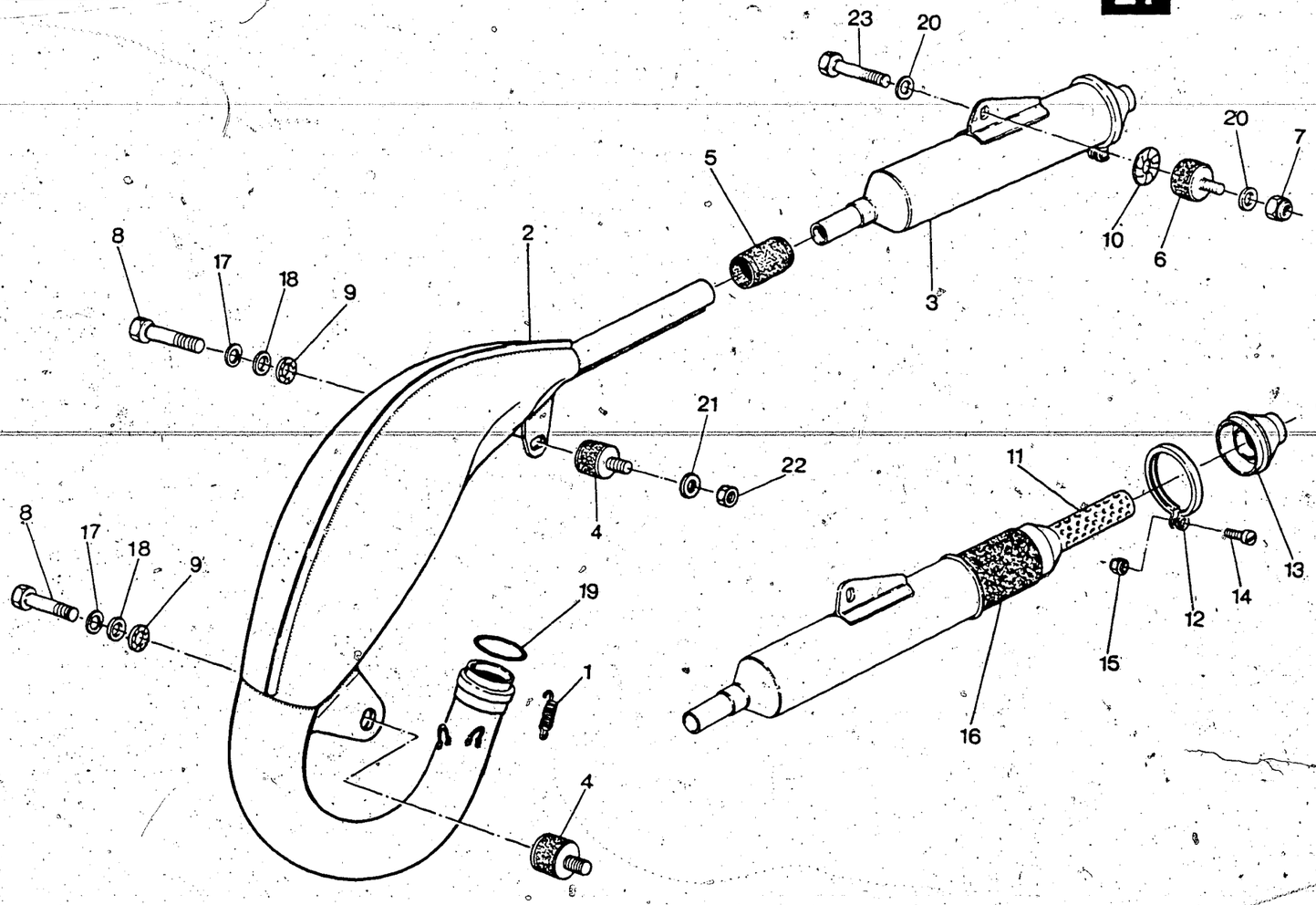

Note Notes Notes Marke	Index No. Pos. N.	Code N. Nr. Code N. Cod Code Nr.	NAME	Q.ty Q.tà Q.te M.ge
	1	46169	Spring	2
	2	53865	Exhaust pipe	1
	3	45426	Silencer assy	1
	4	53863	Damper bushing	2
	5	31632	Rubber	1
	6	53864	Damper bushing	1
	7	N15195-G22	Nut	1
	8	N1078-G22	Screw	2
	9	43591	Washer	2
	10	30809	Washer	1
	11	43598	Tube	1
	12	43600	Clamp	1
	13	43599	Cap	1
	14	N2900-G19	Screw	1
	15	9128	Nut	1
	16	43597	Fiberglass	1
	17	N15536-G22	Spring washer	2
	18	22271	Flat washer	2
	19	38608	«O» Ring	1
	20	N15506-G22	Flat washer	2
	21	N15504-G22	Flat washer	1
	22	N15193-G22	Nut	1
	23	N1137-G22	Screw	1

FRONT WHEEL, HUB & BRAKE (1/2)

CAGIVA **MOD. WMX 125/87 CROSS**

22 TAVOLA - DRAWING TABLE - BILD

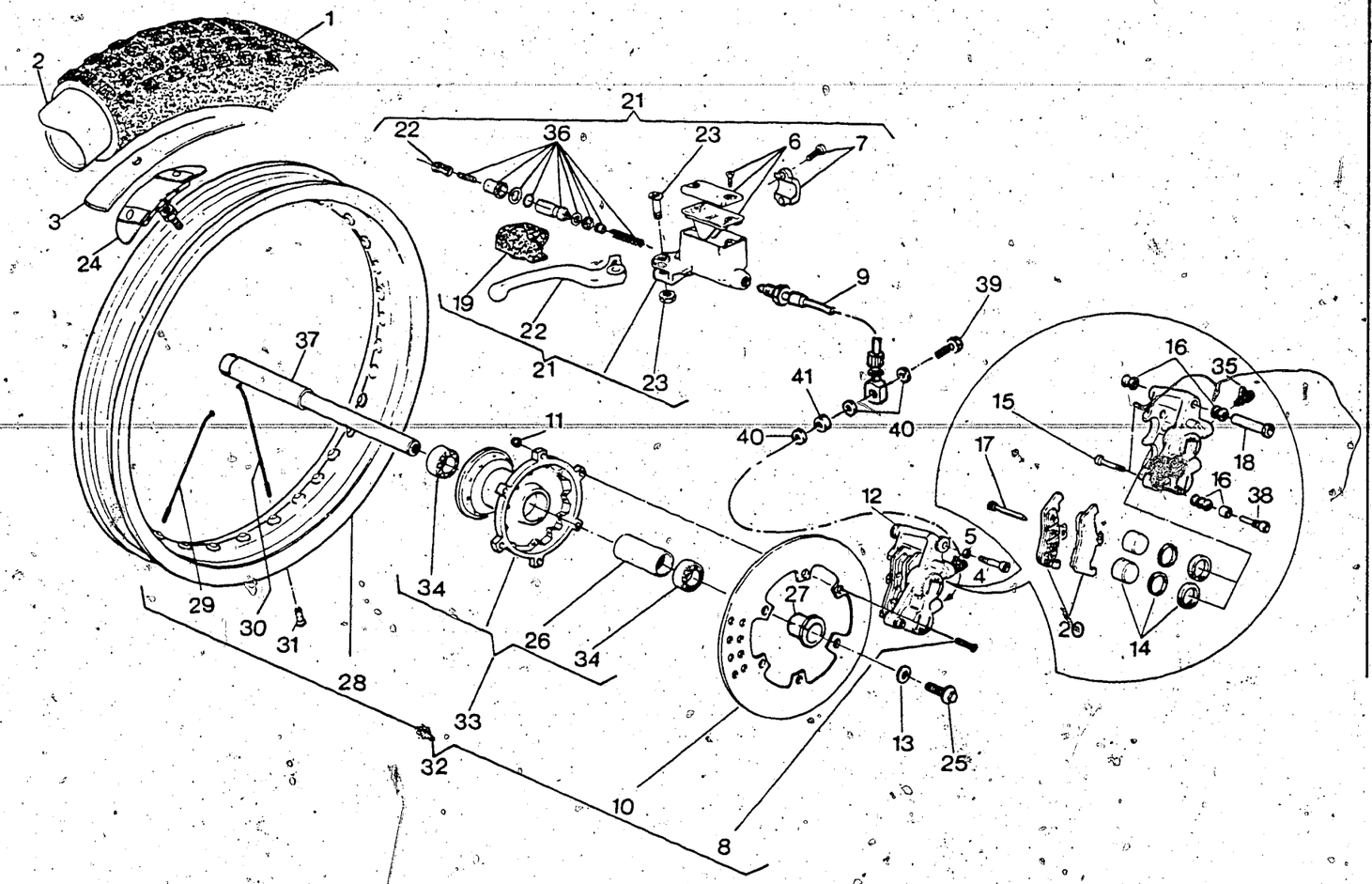

Note Notes Notes Marks	Index No. Pos. N.	Code N. Nr. Code N. Cod Code Nr.	NAME	Q.ty Q.tà Q.te M.ge
	1	53861	Tire MT44 Pirelli 90/90x21"	1
	2	18648	Tube	1
	3	13346	Rim strip	1
	4	53408	Screw	1
	5	N15507-G22	Flat washer	1
	6	46665	Plug kit	1
	7	46666	Staple kit	1
	8	47422	Screw	6
	9	54329	Pipe	1
	10	53165	Brake disc	1
	11	40719	Nut	6
	12	51964	Brake caliper	1
	13	48772	Washer	1
	14	53251	Gasket set	1
	15	53260	Pin	2
	16	53401	Camer guide group	1
	17	53256	Pin	1
	18	53405	Guide	1
	19	46667	Lever guard	1
	20	53406	Pads couple	1
	21	46647	Front brake pump	1
	22	46644	Lever assy	1
	23	46664	Pin, lever kit	1
	24	49036	Tire blend clamp	1
	25	48773	Screw	1
	26	53874	Spacer	1
	27	53796	Spacer	1
	28	53504	Rim WM1/1,6x21"	1
	29	53791	R. Spoke	18
	30	53790	L. Spoke	18
	31	N29004	Nipple	36
	32	53871	Front wheel assy	1
	33	53872	Hub assy	1

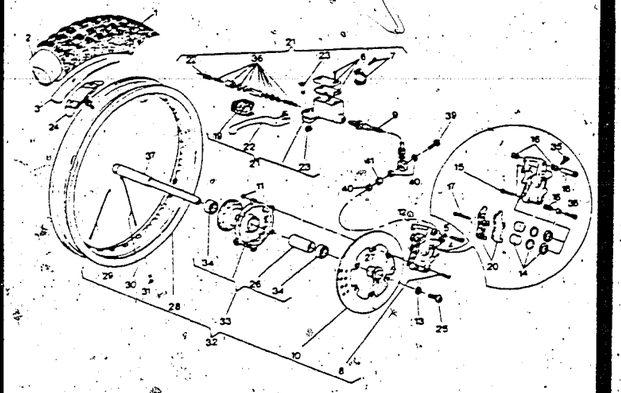

Front Wheel, Hub, Brake(2/2)..E-2

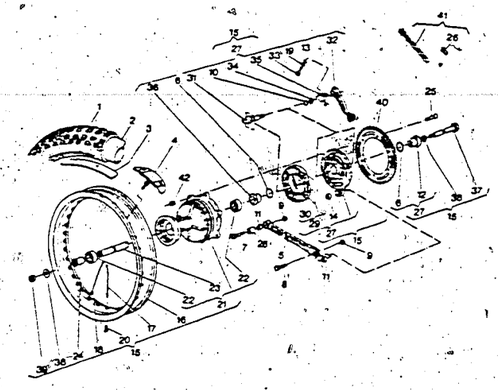

Rear Wheel, Hub, Brake, Chain (1/2).....E-3

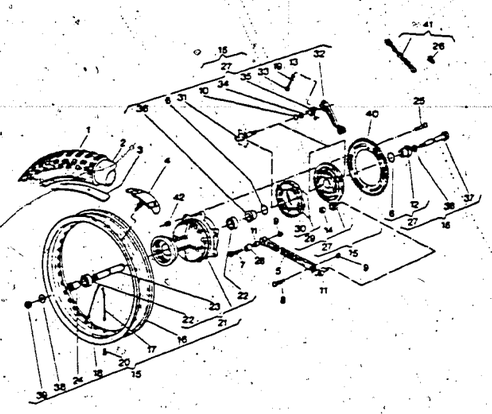

Rear Wheel, Hub, Brake, Chain (2/2).....E-4

FRONT WHEEL, HUB & BRAKE (2/2)

CAGIVA **MOD. WMX 125/87 CROSS**

22 TAVOLA - DRAWING TABLE - BILD

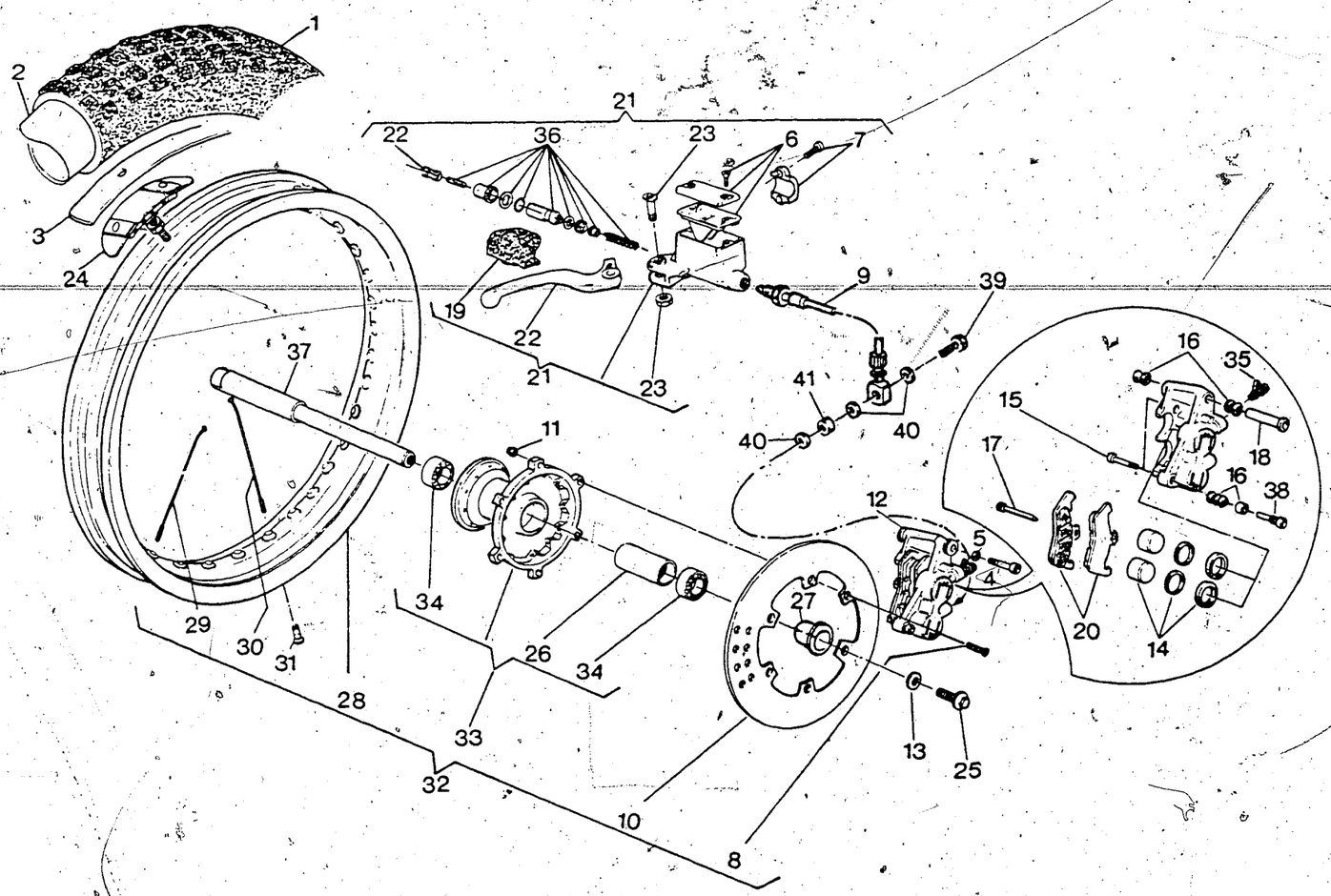

Note Notes Notes Marks	Index No. Pos. N.	Code N. Nr. Code N. Cod Code Nr.	NAME	Q.ty Q.tà Q.te M.ge
	34	43426	Bearing	2
	35	53258	Screw kit	1
	36	46645	Seal set	1
	37	53795	Axle	1
	38	53257	Pin	1
	39	55259	Smal opening	1
	40	21480	Washer	3
	41	55260	Spacer	1

CAGIVA **MOD. WMX 125/87 CROSS**

23 TAVOLA - DRAWING TABLE - BILD

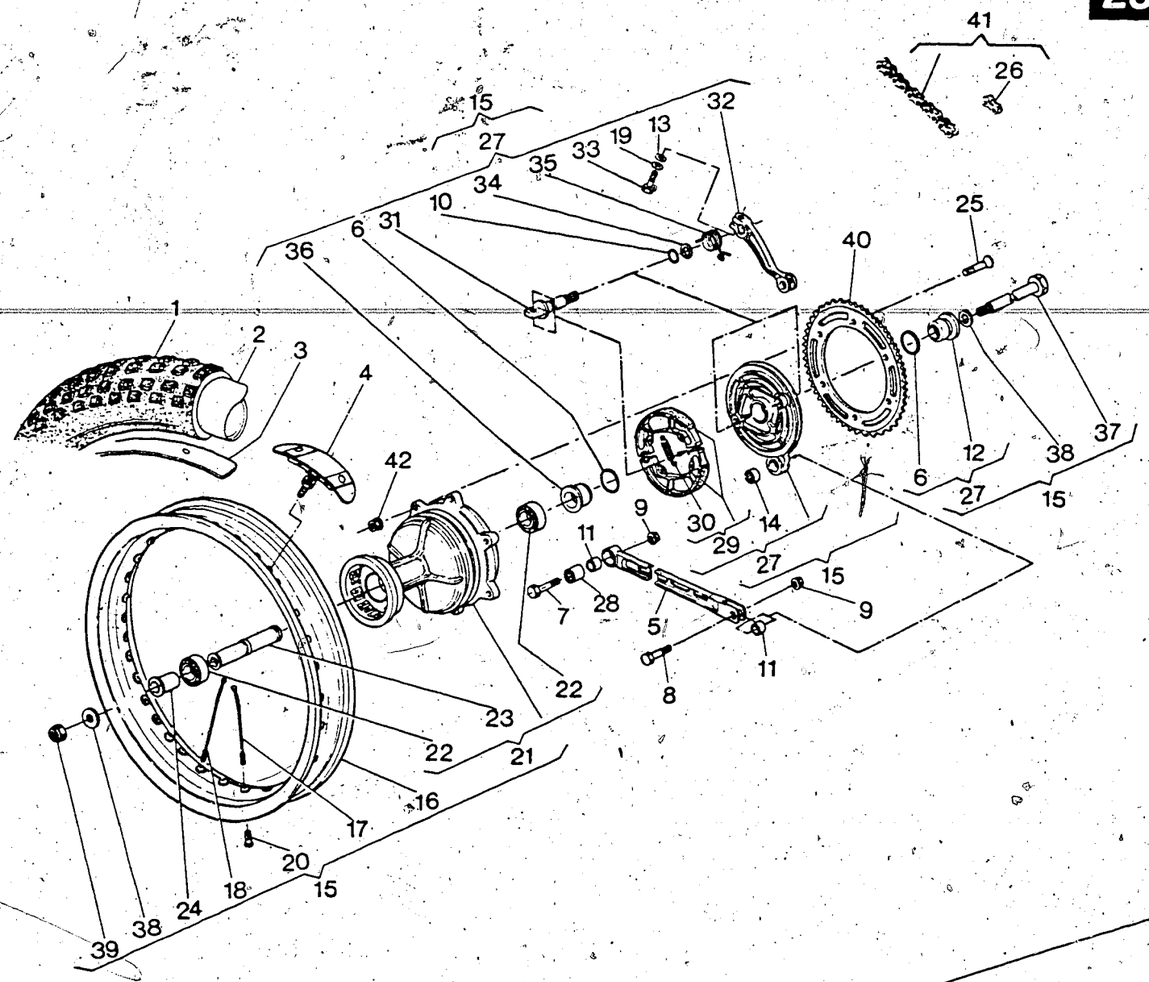

Note Notes Notes Marke	Index No. Pos. N.	Code N. Nr. Code N. Cod Code Nr.	NAME	Q.ty Q.tà Q.te M.ge
	1	53862	Tire 110/100x18" MT32 Pirelli	1
	2	33607	Tube	1
	3	1688	Rim strip	1
	4	49035	Stirrup	1
	5	43595	Tie rod	1
	6	41693	«O» Ring	2
	7	43914	Screw	1
	8	N1146-G22	Screw	1
	9	40720	Nut	2
	10	23114	«O» Ring	1
	11	41720	Spacer	2
	12	48774	Spacer	1
	13	N15504-G22	Flat washer	1
	14	41694	Needle bearing	1
	15	48787	Rear wheel assy without Sprocket and tire	1
	16	49598	Rim WM2/1,85x18"	1
	17	41674	Spoke	18
	18	41675	Spoke	18
	19	N15536-G22	Spring washer	1
	20	N29004	Nipple	36
	21	42177	Front hub assy	1
	22	41681	Bearing	2
	23	42175	Spacer	1
	24	42179	Spacer	1
	25	40796	Screw	6
	26	37439	Master link	1
	27	48786	Side plate assy	1
	28	41694	Needle bearing	1
	29	41686	Brake shoe assy	1

REAR WHEEL, HUB, BRAKE & CHAIN (2/2)

CAGIVA **MOD. WMX 125/87 CROSS**

23 TAVOLA - DRAWING TABLE - BILD

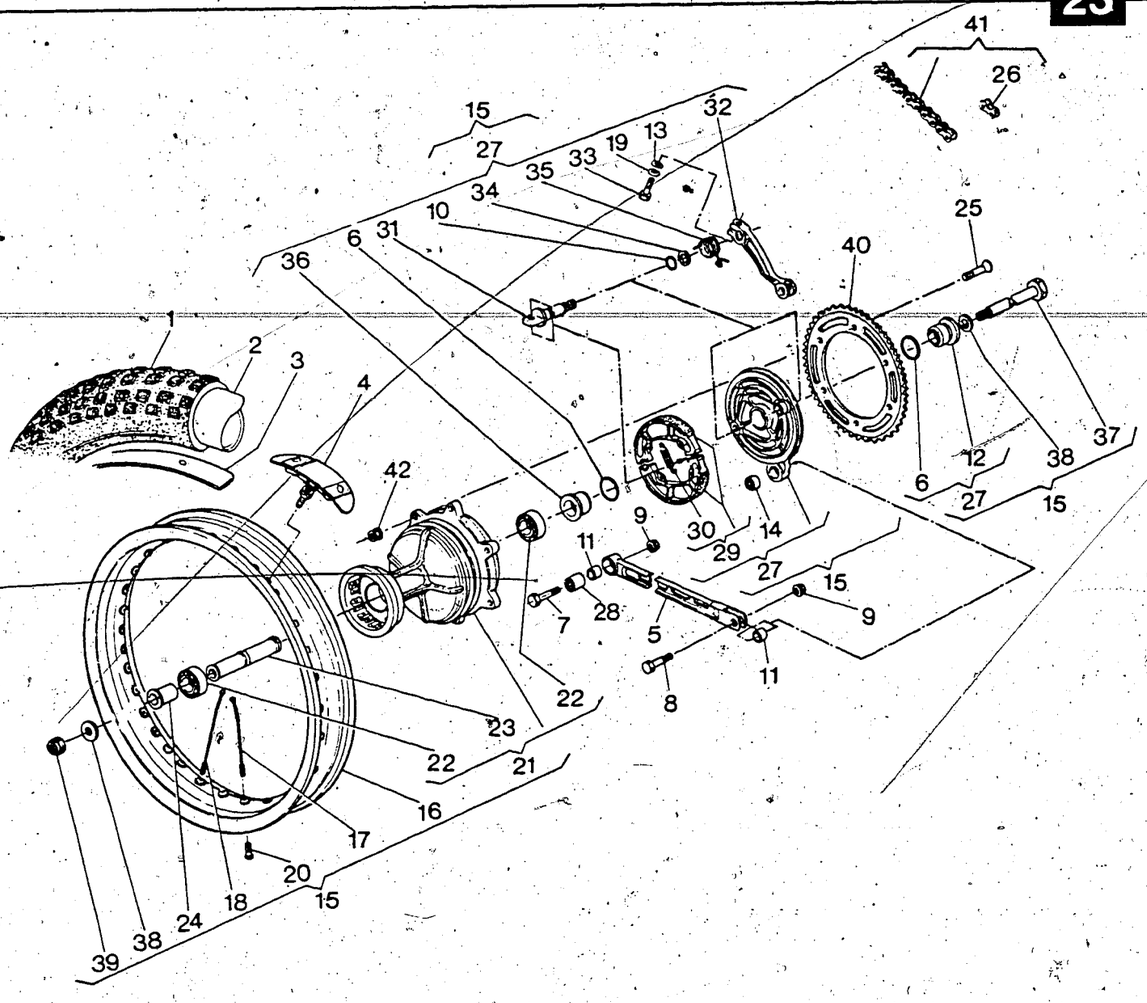

Note Notes Notes Marks	Index No. Pos. N.	Code N. Nr. Code N. Cod Code Nr.	NAME	Q.ty Q.tà Q.te M.ge
	30	38586	Spring	2
	31	41690	Cam	1
	32	46913	Lever	1
	33	N1083-G22	Screw	1
	34	9854	Washer	1
	35	38963	Spring	1
	36	48775	Spacer	2
	37	43943	Axle	1
	38	31492	Washer	2
	39	46327	Nut	1
	40	41698	Sprocket (standard) Z=52	1
		41696	Sprocket Z=50	1
		41697	Sprocket Z=51	1
		41699	Sprocket Z=53	1
		41700	Sprocket Z=54	1
	41	44965	Chain REGINA 5/8x 6,5	1
	42	43283	Nut	6

WHITE POWER

Workshop manual
for the

FRONT FORK
4054



White Power Production b.v.
De Hoge Brug 6
6581 AJ Malden
080-583550
Service department
080-583504

White Power Holland b.v.
Nieuwe Udenseweg 6
5408 NE Volkel
Tel. 04132-73911
Telex 50236 WPH-NL
Service department
04132-72565

K2

Using the White Rower Front Fork 4054, is a very good choise.
Together with the Super Adjuster you have now the opportunity to set your suspension to perfection with White Power Products.
This new front fork has the highest strength to weight ratio ever produced in a front fork.
By using the 'Upside-down' system the front fork is the most rigid fork you ever could buy.
To be sure your front works 100%, even the White Power front fork needs his maintenance. To help you here with we made this manual.
Should there still be questions concerning the front fork, please do not hesitate to contact our service department.

Table of contents

1. Maintenance.
2. Adjusting schedule.
3. Adjusting the pre-load.
4. Changing the oil and adjusting the level.
5. Disasembly and assembly of the fork.

1. Maintenance

To be sure your Fork works perfectly, follow the maintenance schedule.

Every race	Loosen the air release nut, so that possible overpressure can escape.
Every 3 races (In dry conditions, under muddy conditions every race)	Pull the fork wipers down and clean them. Check the oil level and adjust if necessary. (See chapter 4)
Every 6 to 12 races	Disassemble the fork for an overall inspection. (See chapter 5) At least change the oil and fit new seals.

2, What is wrong with the adjusting and what can we do about it.

The spring force and the damping characteristic of the White Power front fork are selected by a team of very experienced testriders. So the settings should be close to perfect for the majority of riders. But not every rider wants the same so to help you to adjust the fork to your personal requirements we made the following adjusting schedule.
Note: After changing something and finding it did not give the results you had expected, first return to the previous setting before making the next change.
When we speak about speed, we are meaning the speed of the front fork during the compression - and rebound stroke.

Spring

Too little pre-load	Fork sags with no rider. (more than 3 cm) While riding into a corner the front is too low. (See Appendix for specifications and latest settings)
Too much pre-load	The fork feels stiff and turning is difficult. (See App.....)
Too soft spring	The fork is too soft in the mid-section and especially going down hill the front is too low. (See App.....)
Too hard spring	The fork is too stiff in the mid-section. (See App.....)

Oil level

Too low	In spite of a correct spring rate and compression damping the fork is bottoming. (See Chapter 4)
Too high	The fork does not use the full stroke and rebounds too fast. It feels like there is too little rebound damping. (See Chapter 4)

Compression damping

Too little at low speed	The fork is unstable and the fork is bottoming in dips on the track. (See App.....)
Too much at low speed	In spite of a soft spring and/or little preload the ride height is too high and the fork is uncomfortable. (See App.....)
Too little at high speed	The fork will bottom easily on steps and jumps. (See App....)
Too much at high speed	The fork is too stiff on square bumps. (See App.....)

Rebound damping

Too little at low speed	The fork is extending too quickly, especially at low speed sections of the track. (See App.....)
Too much at low speed	On fast parts of the track the front rides too low. Front feels harsh. (See App.....)
Too little at high speed	After high or fast jumps the forks extends so fast that the wheel bounces a way from the ground. (See App.....)
Too much at high speed	On brake bumps the front stays too low, and is sometimes bottoming, although the spring rate and compression damping are correct. (See App.....)

3. Adjusting the pre-load

Unscrew the lower fork cap and check the pre-load. (See picture 1) Adjust the pre-load according to the specifacation list (See Appendix) or to your personal requirements. Don't give your fork too much pre-load. During testing we found the best results with a pre-load of between 8 and 25 mm. From its own weight the bike should not sag more than 3 cm. When necessary adjust the pre-load in steps of 5 mm or fit a stronger spring.

4. Changing the oil and adjusting the level

A. Unscrew the lower fork cap (of the inner tube) and drain the oil from the inner tube. (See picture 2)
B. Refit the lower fork cap and unscrew the upper fork cap.
C. Remove all the parts and drain the remaining oil and clean the inside of the fork thoroughly.
D. For refilling we use a thin rod. (length 600 mm, diameter 2.5-4 mm)
E. Put the rod in one of the six holes in the internal screw cap. (See picture 3) When you push on the rod the by pass valve opens.
F. With the fork extended and the valve open, pour about 700cc oil in the fork slowly. Check the specification list for the correct viscosity. (See Appendix)

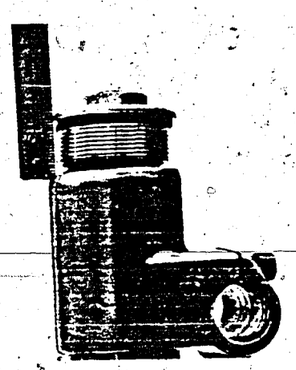
1

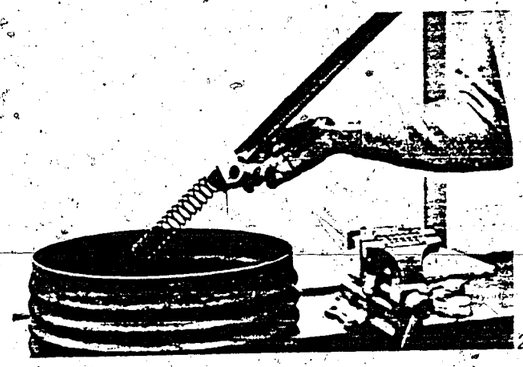
2

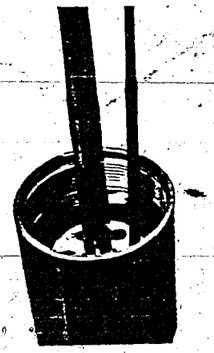
3

WP Front fork oil is a specially blended oil for maximum lubrication and minimum wear in the fork.

G. By keeping the by pass valve open the oil sags in the inner tube. To bleed the air from the inner tube you must keep the valve open for about 3 minutes. Wait till there are no more air bubbles in the oil.
H. Level adjustment.
At a specified distance A the oil level has to be level with the top of the internal screw cap. (See Fig. A) When you want to change the oil level, you have to change distance. A. We had the best results when distance A was between 14 and 16 cm. The spring force graph (See Fig. B) shows you the influence of the oillevel on the overall spring force.
I. Assemble all the parts in the correct order. (See picture 4)

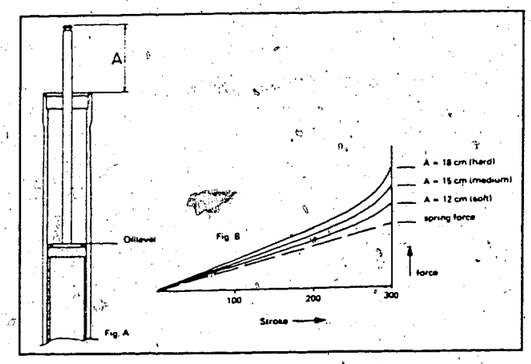

5. Disassembly and assembly of the fork

Follow first point A till C of chapter 4.

D. Remove with sp.tool (no. T901) the inner screw cap. (See picture 5)
E. Remove the rebound ring and the circlip. (use sp.tool no. T902) Now you can remove the damper rod together with all the damping parts from the fork.
F. Put the outer end of the damper rod in a vise with aluminium jaws. (sp.tool nr. T906) To remove the damping system, undo the nut of the damper rod. On the damping specification list you can see the assembly order of the damping valves.
G. Slide the inner tube out of the outer tube and clean all the parts.
H. Replace the fork seals.
For disassembling see picture 6.
For assembling see picture 7. (Use sp.tool no. T903)

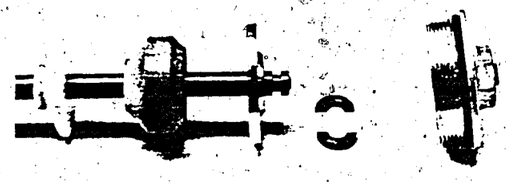

4

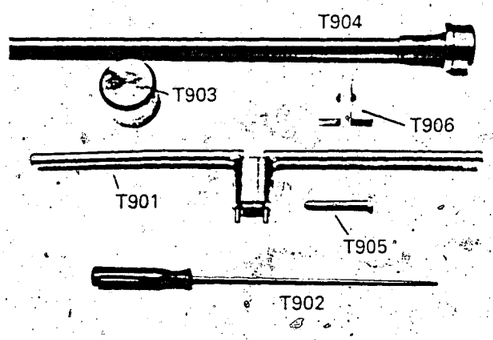

10

I. Check the fork guide bushes.
The bushes are made with a teflon coating over bronze. When the wear is such that the bronze is visible over more than halve of the surface the bushes should be replaced. Also replace the bushes if dirt and metal particles are embedded in the teflon. Use sp.tool no. T904 to remove and fit the bushes into the outer tube.

J. Check the chrome surface of the inner tube for scratches, scoring and roughness. Excessive roughness of the surface is the main cause of the fork pumping itself up. If neccessary replace the inner tube.

K. To remove the axle clamp from the inner tube, heat the axle clamp to 200-230°C. Then fasten the axle clamp in a vise and unscrew the inner tube with sp.tool no. T901 and pin no. T905. (See picture 8)

Reassembly.

A. Degrease the threads of the inner tube and the axle clamp, put a new O-ring in the axle clamp.

B. Put loctite 270 on the threads of the inner tube and the axle clamp and screw, with sp.tool no. T901 and pin no. T905, the inner tube into the axle clamp.

C. Slide the fork wiper on the inner tube.

D. Put grease on the seal and slide the inner tube in the outer tube and fit the fork wiper on the outer tube.

E. Put the sping into the fork.

F. Reassemble the complete damping system. (damper rod, piston etc.) Roll up the piston ring first for easier assembly. (See picture 9)

G. Then replace the complete damping system in the inner tube.

H. Reinstall the circlip and the rebound ring.

I. Tighten the internal screw cap with sp.tool no. T901.

J. Refill the oil and check the level. (See Chapter 4)

K. Assemble the remaining parts (See picture 4) in the correct order and tighten the upper fork cap.

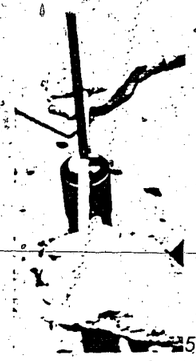
5


6

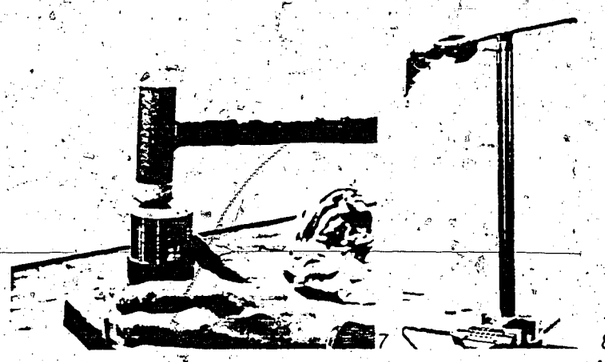
7

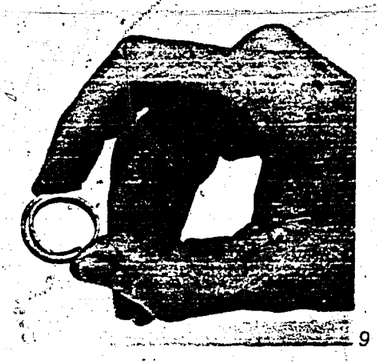
8

9

INDEX

DISEGNO DRAWING DESSIN ZEICHNUNG	TAVOLA DRAWING TABLE BILD	INDEX NO. POS. N.
1199	20	6
1261/20	10	26
1261/30	10	26
1261/50	10	26
1261/80	10	26
1261/100	10	25
1261/100	10	26
1676	14	20
1688	23	3
1911	14	3
1911	19	28
2124	5	7
2709	10	20
2709	11	11
4103	12	12
4167	16	38
4553/30	7	6
4553/60	7	6
4553/80	7	6
4646	15	3
5934	16	29
6096/8	9	4
6597	5	3
6597	6	3
6725/3	5	19
6925	18	9
7719	5	10
7989/3	9	25
7989/5	9	24
7989/8	9	25
7989/10	9	25
9128	21	15
9671	7	21
9854	23	34
10290	5	6
10904/3	7	3
11794/3	2	24
11794/4	2	24
11794/5	2	24
11794/6	2	24
12041/192	12	30
12041/195	12	30
12041/198	12	30
12451	12	34
12723	18	8
13346	22	3
14822	4	33
17040	10	4
18048	13	12
18648	22	2
18922	20	15
19563	8	24
19620	5	20
19789	9	33
20066	16	33
21480	22	40
21810	11	13
21811	11	15
21812	17	20
21812	20	2
21929/1	2	22
21929/2	2	22
21929/3	2	22
21929/4	2	22
21929/5	2	22
22271	21	18
22613	4	13
22946	6	18
23114	23	10
23158	11	9
25044	8	3
25397	2	13
27142	14	25
27143	14	26
27521	13	13
27521	2	28
27910/37	12	7
27960	6	14
28055/30	9	26
28055/80	9	26
28055/100	9	26
29042	12	3
29116	15	1
29117	15	2
29665/4	12	25
29861	10	23
30232	19	23
30343	17	2
30344	17	3
30793	9	10
30809	21	10
30820	8	17
31060	20	4
31388	6	15
31485	8	18
31492	23	38
31632	21	5
31743	9	29
31748	3	13
31748	5	12
31748	6	8
31756/8	4	29
31768	9	6
31773	9	21
31813	8	7
31830	8	16
32064	16	23
32065	16	24
32069/80	16	50
32069/100	16	50
32069/120	16	50
32102	20	3
32203	7	19
32389	5	5
32389	5	25
32907	16	64
33055	1	7
33192	8	9
33303	9	32
33424	9	28
33427	9	28
33536	20	11
33564	16	26
33607	23	2
33781	8	19
34013	8	2
34064	5	13
34067	5	11
34083	4	28
34087	8	20
34204	5	2
34292/3	3	2
34292/4	3	2
34292/5	3	2
34292/6	3	2
34358	2	6
34451	6	5
34475	5	30
35106	8	15
35109	8	14
35353	12	8
35408	2	17
35620	3	6
35900	16	22
36334	3	9
36357	5	15
36430/5	9	17
36430/6	9	17
36430/7	9	17
36430/8	9	17
36430/10	9	9
36440	5	8
36441	9	27
36459	9	23
36461	10	8
36462	10	10
36463	10	9
36653	5	24
37120	6	9
37135	6	17
37136	5	27
37198	5	14
37439	23	26
37622	13	2
37632	13	4
37636	4	1
37636	19	6
37637	20	7

DISEGNO DRAWING DESSIN ZEICHNUNG	TAVOLA DRAWING TABLE BILD	INDEX NO. POS. N.
37650	20	8
37656	19	7
37656	4	2
37745	16	46
37745	20	10
37746	13	9
37906	13	7
37947	13	11
38110/30	9	18
38110/80	9	18
38110/90	9	18
38110/100	9	18
38110/110	9	18
38115	16	40
38214	6	4
38215	6	2
38265	3	10
38388	8	4
38389	8	22
38397	3	1
38419/3	3	17
38419/4	3	17
38419/5	3	17
38419/6	3	17
38419/7	3	17
38419/8	3	17
38438	8	10
38439	5	31
38515	5	26
38516	5	4
38518	5	22
38519	3	14
38519	6	19
38520	2	4
38520	6	11
38534	2	9
38535	2	12
38549	4	32
38550	4	34
38551	4	31
38552	4	27
38586	23	30
38608	21	19
38610	7	1
38612	7	4
38613	7	8
38614	7	5
38615	7	11
38616	7	9
38617	7	13
38618	7	16
38620	7	17
38622	7	14
38623	7	15
38624	7	20
38706	10	5
38707	10	7
38708	10	13
38711	10	3
38712	10	2
38713	10	14
38721	10	11
38724	10	15
38726	8	11
38727	8	12
38728	10	16
38748	20	13
38752	20	12
38764	16	43
38767	16	45
38768	16	44
38797	17	12
38798	17	13
38799	17	15
38801	17	18
38802	17	14
38805	17	8
38956	16	7
38963	23	35
39031	19	26
39338/3	9	16
39338/4	9	16
39338/5	7	2
39338/5	9	16
39630	2	10
39876	8	1
39899	2	11
39900	11	1
39916	4	26
39930	9	2
39931	9	3
39932	9	8
39934	9	13
39936	9	34
39937	9	14
39939	9	22
39940	9	19
40220	8	13
40393	9	20
40684	17	6
40719	14	14
40719	22	11
40720	14	22
40720	16	57
40720	23	9
40767	20	9
40796	23	25
40813	20	16
40907	1	1
40913	6	6
41100	9	12
41107	10	1
41512	16	13
41512	18	11
41674	23	17
41675	23	18
41681	23	22
41686	23	29
41690	23	31
41693	23	6
41694	23	28
41694	23	14
41696	23	40
41697	23	40
41698	23	40
41699	23	40
41700	23	40
41707	16	5
41712	16	15
41714	16	31
41720	23	11
42022	16	30
42022	16	32
42023	11	3
42023	16	54
42024	16	6
42027	16	18
42028	16	9
42029	16	21
42030	16	11
42175	23	23
42177	23	21
42179	23	24
42215/1	2	29
42215/2	2	29
42215/3	2	29
42215/4	2	29
42215/5	2	29
42240	3	8
42278	3	16
42487	10	19
42548	9	5
42643	5	23
42672	18	13
42673	18	12
43067	2	15
43121	4	36
43122	4	8
43123	4	11
43124	4	10
43159	16	12
43283	23	42
43426	22	34
43441	11	1
43474	11	7
43496	14	13
43513	8	6
43524	16	1

DISEGNO DRAWING DESSIN ZEICHNUNG	TAVOLA DRAWING TABLE BILD	INDEX NO. POS. N.
43526	16	25
43527	16	2
43530	16	3
43534	16	4
43535	16	28
43537	16	55
43538	16	19
43541	16	48
43584	18	16
43587	18	4
43589	21	3
43591	21	9
43592	20	5
43593	20	14
43595	23	5
43597	21	16
43598	21	11
43599	21	13
43600	21	12
43634	4	19
43636	19	18
43637	4	5
43638	4	22
43639	4	6
43640	4	14
43714	4	17
43715	4	12
43716	4	9
43717	4	7
43718	1	3
43719	1	2
43720	1	4
43726	16	49
43738	19	3
43747	19	2
43823	1	5
43824	1	6
43825	18	1
43914	23	7
43943	23	37
43944	14	27
43945	14	28
43946	14	8
43947	14	6
43980	4	15
43981	4	16
44014	14	23
44091	13	3
44314	11	8
44965	23	41
44978	6	12
45022	5	21
45062	8	5
45381	2	25
45426	21	3
45490	19	27
45491	19	19
45492	19	20
45496	16	53
45497	16	51
45498	14	29
45499	14	24
46139	20	18
46140	16	34
46145	17	19
46169	21	1
46171	16	27
46172	16	52
46173	16	56
46225	10	18
46226	10	17
46327	23	39
46383	11	12
46412	1	8
46644	22	22
46645	22	36
46647	22	21
46664	22	23
46665	22	6
46666	22	7
46667	22	19
46913	23	32
46965	6	13
47160	10	27
47282	8	8
47422	22	8
47487	14	2
47496	10	12
47519	9	7
47520	9	15
47571	16	35
47853	10	22
47876	12	35
48408	19	1
48413	19	12
48414	19	8
48415	19	10
48435	16	8
48436	16	10
48530	14	9
48531	14	10
48533	14	11
48534	14	12
48535	14	15
48661	17	1
48752	18	5
48753	18	10
48770	16	37
48772	22	13
48773	22	25
48774	23	12
48775	23	36
48786	23	27
48787	23	15
48837	14	23
48838	14	4
48840	18	15
48888	17	7
48913	17	4
48915	17	11
48916	17	16
48917	17	5
48918	17	10
48954	3	15
48955	3	19
48956	3	4
48957	3	3
48962	11	2
48971	13	5
49035	23	4
49036	22	24
49060	12	4
49465	9	1
49466	9	11
49487	16	61
49492	16	60
49493	16	62
49494	16	59
49495	16	58
49598	23	16
49722	4	35
49723	19	17
49792	2	3
49933	20	1
50018	20	19
50019	19	9
50020	19	11
50461	12	14
50462	12	15
50463	12	13
50465	12	10
50466	12	16
50467	12	6
50468	12	18
50469	12	17
50471	12	20
50472	12	21
50473	12	32
50475	12	2
50476	12	22
50478	12	26
50479	12	31
50481	12	28
50482	12	27
50483	12	33
50485	12	29
50486	12	1
50487/35	12	5

DISEGNO DRAWING DESSIN ZEICHNUNG	TAVOLA DRAWING TABLE BILD	INDEX NO. POS. N.
50488/264	12	9
50489	12	11
50490/60	12	19
50491/350	12	23
51964	22	12
52183	13	1
52345	15	8
52398	5	18
52609	4	25
52610	4	30
52688	4	4
52689	4	3
52702	6	1
53023/3	2	8
53023/4	2	8
53023/5	2	8
53023/6	2	8
53023/8	2	8
53145/1	2	5
53145/2	2	5
53145/3	2	5
53145/4	2	5
53148	15	5
53149	15	6
53150	15	11
53151	15	17
53152	15	10
53153	15	9
53154	15	12
53155	15	14
53156	15	13
53157	15	15
53165	22	10
53187	2	21
53192/1	2	23
53192/2	2	23
53192/3	2	23
53192/4	2	23
53192/5	2	23
53216	5	1
53219	5	17
53223	2	1
53227	2	7
53229	16	47
53230	16	41
53239	15	29
53240	15	60
53251	22	14
53256	22	17
53257	22	38
53258	22	35
53260	22	15
53401	22	16
53405	22	18
53406	22	20
53408	22	4
53504	22	28
53790	22	30
53791	22	29
53795	22	37
53796	22	27
53861	22	1
53862	23	1
53863	21	4
53864	21	6
53865	21	2
53871	22	32
53872	22	33
53874	22	26
53901	19	22
53906	2	16
53907	13	6
53908	17	9
53910	12A	1
53954	15	21
53955	15	19
53956	15	20
53957	15	24
53961	15	30
53962	15	31
53963	15	32
53964	15	33
53965	15	34
53966	15	35
53967	15	36
53968	15	37
53969	15	38
53970	15	39
53971	15	40
53972	15	41
53973	15	42
53974	15	43
53975	15	44
53978	15	45
53979	15	46
53979	15	47
53979	15	48
53980	15	49
53981	15	50
53982	15	51
53983	15	52
53984	15	53
53985	15	54
53986	15	55
53987	15	56
53988/1940	15	59
53988/2050	15	59
53988/2245	15	59
53988/2550	15	59
53990	15	61
53991/14	15	62
53991/16	15	62
53991/18	15	62
53991/20	15	62
53991/22	15	62
53991/24	15	62
53992	15	63
53993	15	64
53994	15	65
53995	15	66
53996	15	67
53997	15	68
53998	15	69
53999	15	70
54000	15	71
54001	15	72
54002/4244	15	73
54002/4248	15	73
54002/4448	15	73
54002/4451	15	73
54002/4548	15	73
54003	15	75
54004	15	76
54005	15	77
54006	15	78
54007	15	79
54008	15	80
54009	15	81
54010	15	82
54011	15	83
54012	15	84
54013	15	85
54014	15	58
54015/100	15C	74
54015/25	15C	74
54015/50	15C	74
54021	2	20
54025	2	14
54271/165	12A	2
54271/168	12A	2
54271/170	12A	2
54271/175	12A	2
54271/180	12A	2
54272/65	12A	3
54272/68	12A	3
54274	17	1
54329	22	9
54397	15	27
55036/60	12A	4
55037	12A	5
55038	12A	6
55039	12A	7
55040	12A	8
55041	12A	9
55042	12A	10
55043	12A	11
55044	12A	12
55045	12A	13

DISEGNO DRAWING DESSIN ZEICHNUNG	TAVOLA DRAWING TABLE BILD	INDEX NO. POS. N.
55046	12A	14
55047	12A	15
55048	12A	16
55049	12A	17
55050	12A	18
55051	12A	19
55052	12A	20
55053	12A	21
55054	12A	22
55055	12A	23
55056	12A	24
55057	12A	25
55058	12A	26
55059	12A	27
55060	12A	28
55061	12A	29
55071	2	27
55072	2	26
55093	2	30
55259	22	39
55260	22	41
55496	19	22
55558	12A	1
55560	16	41
55563	15	29
55564	15	60
55764	15	57
55765	15	4
55774/1	15	86
55774/3	15	86
55774/5	15	86
55774/10	15	86
55775	15	87
55776/3	15	88
55776/5	15	88
55788	16	47
5761/52	12	24
5761/55	12	24
N1049-G22	3	11
N1077-G22	5	28
N1078-G22	19	5
N1078-G22	21	8
N1079-G22	11	10
N1079-G22	16	17
N1079-G22	19	14
N1079-GO	10	6
N1081-G22	8	21
N1081-G22	10	24
N1081-G22	18	2
N1083-G22	23	33
N1085-G22	18	14
N1089-G22	16	16
N1137-G22	21	23
N1140-G22	14	18
N1146-G22	23	8
N1152-G22	14	19
N1153-G22	14	16
N1532-G22	3	12
N1537-G22	19	16
N2482-G22	9	30
N2487-G22	8	23
N2487-G22	11	5
N2489-G22	3	18
N2505-G22	5	29
N2509-G22	2	18
N2509-G22	6	7
N2510-G22	15	28
N2511-G22	2	2
N2511-G22	4	23
N2512-G22	5	9
N2514-G22	5	16
N2515-G22	4	18
N2517-G22	4	24
N2556-G22	15	18
N2557-G22	16	65
N2558-G22	15	7
N2569-G22	14	21
N2870-G22	3	7
N2900-G19	21	14
N3209-G22	15	25
N4103-G19	17	17
N7104-G19	19	21
N7330-G22	3	20
N7335-G22	6	10
N7350-G22	20	17
N15031-G22	3	5
N15033-G22	18	3
N15064-G22	14	17
N15064-G22	16	39
N15066-G22	16	63
N15192-G22	15	23
N15193-G22	19	13
N15193-G22	19	25
N15193-G22	21	22
N15193-G22	4	21
N15195-G22	21	7
N15197-G22	15	16
N15213-G22	16	36
N15503-G22	11	7
N15503-G22	15	22
N15503-G22	15	26
N15503-G22	9	31
N15504-G22	16	14
N15504-G22	18	7
N15504-G22	2	19
N15504-G22	21	21
N15504-G22	23	13
N15506-G22	14	5
N15506-G22	16	66
N15506-G22	21	20
N15507-G22	22	5
N15508-G22	16	20
N15536-G22	11	14
N15536-G22	21	17
N15536-G22	23	19
N15548-G22	13	8
N15548-G22	16	42
N15549-G22	13	10
N15549-G22	19	4
N15549-G22	19	24
N15549-G22	4	20
N15551-G22	19	15
N15580	6	16
N15766-G22	11	6
N20067-G22	18	6
N21002	11	4
N21202-GO	10	21
N21202-GO	7	22
N21204-GO	7	10
N21206	7	7
N21213	7	12
N21507	7	18
N29004	22	31
N29004	23	20